www.reelschematic.com

FURUNO

INSTALLATION MANUAL

DOPPLER SONAR

MODEL DS-30

FURUNO ELECTRIC CO., LTD.
NISHINOMIYA, JAPAN

www.reelschematic.com

© FURUNO ELECTRIC CO., LTD.

9-52 Ashihara-cho,
Nishinomiya 662-8580, JAPAN

Telephone : 0798-65-2111
Fax : 0798-65-4200

Your Local Agent/Dealer

All rights reserved. Printed in Japan

FIRST EDITION : MAY 1993
P2 : SEP. 25, 2004

Pub. No. IME-72360-P2

(TATA) DS-30

0008047460 0

IME72360P20

www.reelschematic.com

⚠ SAFETY INSTRUCTIONS

"DANGER", **"WARNING"** and **"CAUTION"** notices appear throughout this manual. It is the responsibility of the installer of the equipment to read, understand and follow these notices. If you have any questions regarding these safety instructions, please contact a FURUNO agent or dealer.

⚠ **DANGER**	This notice indicates a potentially hazardous situation which, if not avoided, will result in death or serious injury.
⚠ **WARNING**	This notice indicates a potentially hazardous situation which, if not avoided, could result in death or serious injury.
⚠ **CAUTION**	This notice indicates a potentially hazardous situation which, if not avoided, could result in minor or moderate injury, or property damage.

www.reelschematic.com

⚠ WARNING

Only qualified personnel should work inside the equipment.

This equipment uses high voltage electricity which can shock, burn, or cause death.

Turn off the power at the ship's mains switchboard before beginning the installation. Post a warning sign near the switchboard to ensure that the power will not be applied while the equipment is being installed.

Serious injury or death can result if the power is not turned off, or is applied while the equipment is being installed.

⚠ CAUTION

Ground the equipment.

Ungrounded equipment can give off or receive electro-magnetic interference or cause electrical shock.

Confirm that the power supply voltage is compatible with the voltage rating of the equipment.

Connection to the wrong power supply can cause fire or equipment damage. The voltage rating appears on the label at the rear of the equipment.

www.reelschematic.com

Table of Contents

Complete Set 1
Installation Materials 3

CHAPTER 1. GENERAL 1-1
1.1. Selecting Mounting Location 1-1
1.1.1. Transducer (Hull Unit) 1-1
1.1.2. Other Indoor Units 1-2
1.2. Grounding 1-3

CHAPTER 2. MOUNTING 2-1
2.1. Display Unit and Operation Panel 2-1
2.1.1. Standard Mounting 2-1
2.1.2. Mounting with Fixing Plate 2-2
2.2. Processor Unit 2-4
2.3. Transceiver Unit 2-4
2.4. Junction Box 2-4
2.5. Transducer (Hull Unit) 2-5
2.6. Rate-of-Turn Gyro Unit (Option) 2-7
2.6.1. Mounting Procedure 2-7
2.6.2. Leveling Adjustment 2-8

CHAPTER 3. WIRING 3-1
3.1. Precautions for Cable Installation 3-1
3.1.1. Cable between Hull Unit (transducer) and Transceiver 3-1
3.1.2. Cable between Transceiver Unit and Processor Unit (via Junction Box) 3-1
3.1.3. Other Connection Cables of DS-30 3-1
3.2. Cable Specification 3-2
3.3. Cable Fabrication 3-5
3.3.1. Transducer Cable 3-5
3.3.2. Cables between Transceiver Unit/Junction Box/Processor Unit (TTYCY-16S) 3-5
3.3.3. Cables between Processor Unit/Main Display Unit/Sub Display Unit (CO-SPEVV-SB-C 0.2x10P) 3-6
3.3.4. CIF/NMEA Data Signal Cable (CO-SPEVV-SB-C 0.2X5P) 3-8
3.3.5. Other Cables 3-9
3.4. Remarks on Connection with Other Equipment 3-10
3.4.1. KP Input Signal for Interference Rejection 3-10
3.4.2. NMEA/CIF Signal I/O Circuit 3-11
3.4.3. Requirement of Wind Direction and Speed Signal 3-11
3.4.4. Requirement in Engine Revolution Speed Signal 3-11
3.4.5. Connection of Gyro Signal (RS-232C) 3-12

CHAPTER 4. POST-INSTALLATION SETTING 4-1
4.1. DIP Switch Setting 4-1
4.1.1. Display Unit 4-1
4.1.2. Processor Unit 4-2
4.1.3. Distribution Box 4-3
4.1.4. Digital Indicator DS-351 (option) 4-4
4.2. Setting Offset Data Menu 4-5
4.3. Setting System Menu 4-7
4.3.1. Opening System Menu 4-7

www.reelschematic.com

4.3.2. Closing System Menu 4-7
4.3.3. Setting Display Unit Preset Menu 4-7
4.3.4. Setting Ship Data Menu 4-9
4.3.5. Setting External Sensor Menu 4-10

CHAPTER 5. POST-INSTALLATION CHECK 5-1
5.1. LED Status Check 5-1
5.1.1. Location of LEDs 5-1
5.1.2. Processor Unit 5-2
5.1.3 Transceiver Unit 5-6
5.1.4. Rate-of-Turn Gyro 5-8
5.1.5. Distribution Box 5-9
5.2. Self-check 5-11
5.2.1. Procedure 5-11
5.2.2. Panel Test 5-11
5.2.3. Single Test 5-12
5.2.4. Continuous Test 5-15
5.2.5. TX/RX Test 5-16
5.3. Checking External Noise and Interference 5-17
5.3.1. External Noise Check 5-17
5.3.2. Interference Check 5-18

INTERCONNECTION DIAGRAM I-1

OUTLINE DRAWING D-1

APPENDIX. LIST OF DIP SWITCH SETTING AP-1
DIP Switch Location AP-1
Setting and Function of DIP Switch AP-1
1) Display Unit AP-1
2) Processor Unit AP-2
3) Transceiver Unit AP-6
4) Digital Indicator AP-7
5) Distribution Unit AP-8

www.reelschematic.com

Complete Set

No.	Name	Type	Weight (kg)	Qty	Remarks
1	Main Display	DS-300	9.5	1	
2	Operation Panel	DS-301	1.5	1	
3	Processor Unit	DS-310	40	1	
4	Transceiver Unit	DS-320	14	1	
5	Transducer/Casing	DS-330/DS-331	82	1	Select one.
	Seachest with Gate Valve(incl. Transducer)	DS-335	450		
6	Installation Materials			1set	
7	Spare Parts			1set	

Option

No.	Name	Type	Weight (kg)	Remarks
1	Junction Box	DS-360	5.0	
2	Rate-of-turn Gyro	DS-340	5.5	
3	Distribution Unit	DS-370	19.0	
4	Digital Indicator	DS-350	7.0	
		DS-351	4.0	Flush mount
5	Remote Box	DS-359	0.7	For DS-351
6	Analog Indicator	DS-381	6.4	-10 to 40kt, ø200, Flush mount
		DS-382	6.0	-10 to 40kt, ø200, Bulkhead mount
		MF-22A-1	6.4	-10 to 30kt, ø200, Flush mount
		MF-22A-2	6.0	-10 to 30kt, ø200, Bulkhead mount
		MF-22A-3	1.3	-10 to 30kt, ø100, Flush mount
		MF-22A-4	4.4	-10 to 3okt, ø200, Flush mount (less brim)
		MF-22A-6	6.0	-10 to 30kt, ø200, Flush mount)
		MF-22A-7	6.0	-10 to 30kt, ø200, Bulkhead mount, (counterclockwise dial)
		MF-22A-8	6.0	-10 to 30kt, ø200, Bulkhead mount, (counterclockwise dial)
7	Range Switch Box	DS-389	0.7	Flush mount
8	Dimmer	MF-22L-1	1.2	Flush mount
		MF-22L-2	1.3	Bulkhead mount

www.reelschematic.com

No.	Name	Type	Weight (kg)	Remarks
9	Distance Indicator	DS-730	1.7	Flush mount
		DS-730	1.7	Tabletop mount
		MF-22T-1	6.0	Flush mount
		MF-22T-2	9.0	Bulkhead mount
		MF-22T-3	6.0	Tabletop mount

www.reelschematic.com

FURUNO

CODE NO.	000-027-927	66AM-X-9401-1
TYPE	CP66-00800	

工事材料表 INSTALLATION MATERIALS

DS-30 トップラソナー DOPPLER SONAR DOCKING SYSTEM

番号 No.	名称 NAME	略図 OUTLINE	型名／規格 DESCRIPTIONS	数量 Q'TY	用途／備考 REMARKS
1	コネクタ CONNECTOR	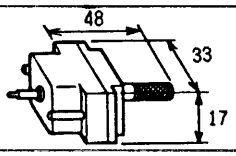	00-8016-020-000-701V CODE NO. 000-128-949	2	主指示器用 FOR MAIN DISPLAY
2	コネクタコンタクト CONNECTOR CONTACT PIN	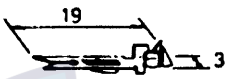	60-8017-0313-00-339 CODE NO. 000-519-542	30	主指示器用 FOR MAIN DISPLAY
3	圧着端子 CRIMP-ON LUG	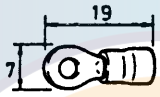	FV1.25-M4 赤 RED CODE NO. 000-536-715	3	主指示器用 FOR MAIN DISPLAY
4	アース銅板 *鉄付* COPPER STRAP /W STEEL PLATE	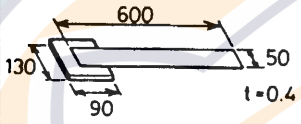	0.4X50X600MM CODE NO. 000-810-253	1	主指示器用 FOR MAIN DISPLAY
5	六角ナット 1種 HEX. NUT		M6 SUS304 CODE NO. 000-863-109	8	主指示器用 FOR MAIN DISPLAY
6	ミカキ平座金 FLAT WASHER		M6 SUS304 CODE NO. 000-864-129	4	主指示器用 FOR MAIN DISPLAY
7	バネ座金 SPRING WASHER		M6 SUS304 CODE NO. 000-864-260	4	主指示器用 FOR MAIN DISPLAY
8	10対ケーブル 10P TWISTED PAIR CABLE		13S4012 (CO-SPEVV-SB-C 0.2X10P *30M*) CODE NO. 000-560-424	1	主指示器↔演算制御部 MAIN DISPLAY ↔ PROCESSOR
9	+トラスタッピングネジ TAPPING SCREW	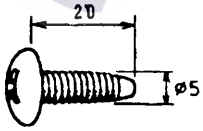	5X20 1種 SUS304 CODE NO. 000-802-081	4	操作箱用 OPERATION PANEL
10	六角ナット 1種 HEX. NUT	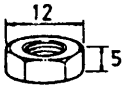	M6 SUS304 CODE NO. 000-863-109	8	操作箱用 OPERATION PANEL

CP66-00801 002-876-270

CP66-00802 002-876-280

非防爆型送受信器選択の時
FOR NORMAL TYPE TRANSCEIVER

図番 (1/3)
DWG. NO. C7236-M14-B

FURUNO ELECTRIC CO., LTD

www.reelschematic.com

FURUNO

CODE NO.	000-027-927	66AM-X-9402-3
TYPE	CP66-00800	

工事材料表 INSTALLATION MATERIALS

DS-30 ドップラソナー DOPPLER SONAR DOCKING SYSTEM

	番号 No.	名称 NAME	略図 OUTLINE	型名／規格 DESCRIPTIONS	数量 Q'TY	用途／備考 REMARKS
CP66-00802 002-876-280	11	ミカ゛キ平座金 FLAT WASHER		M6 SUS304 CODE NO. 000-864-129	4	操作箱用 OPERATION PANEL
	12	ハ゛ネ座金 SPRING WASHER		M6 SUS304 CODE NO. 000-864-260	4	操作箱用 OPERATION PANEL
	13	コネクタ CONNECTOR	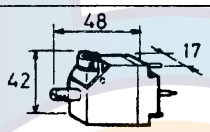	00-8016-020-313-704V CODE NO. 000-107-488	1	演算制御部用 FOR PROCESSOR DS-310
	14	コネクタ CONNECTOR	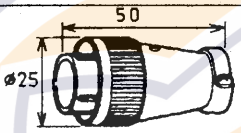	SRCN6A16-10P CODE NO. 000-508-663	2	演算制御部用 FOR PROCESSOR DS-310
CP66-00803 002-876-330	15	圧着端子 CRIMP-ON LUG	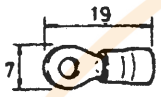	FV2-M4 アカ RED CODE NO. 000-536-716	10	演算制御部用 FOR PROCESSOR DS-310
	16	圧着端子 CRIMP-ON LUG	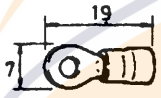	FV1.25-M3 アカ RED CODE NO. 000-538-110	150	演算制御部用 FOR PROCESSOR DS-310
	17	圧着端子 CRIMP-ON LUG	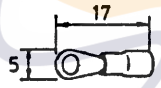	FV0.5-3 キ YEL CODE NO. 000-538-112	12	演算制御部用 FOR PROCESSOR DS-310
	18	アース銅板 *鉄付* COPPER STRAP W/STEEL PLATE	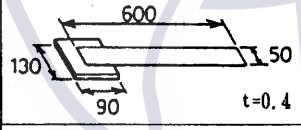	0.4X50X600MM CODE NO. 000-810-253	1	演算制御部用 FOR PROCESSOR DS-310
	19	圧着端子 CRIMP-ON LUG	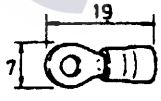	FV1.25-M4 アカ RED CODE NO. 000-536-715	50	送受信器用 FOR TRANSCEIVER
CP66-00804 002-876-350	20	アース銅板 *鉄付* COPPER STRAP W/STEEL PLATE	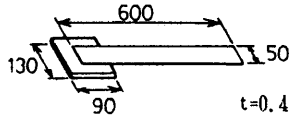	0.4X50X600MM CODE NO. 000-810-253	1	送受信器用 FOR TRANSCEIVER

非防爆型送受信器選択の時
FOR NORMAL TYPE TRANSCEIVER

図番 DWG. NO. C7236-M15-D (2/3)

FURUNO ELECTRIC CO., LTD

www.reelschematic.com

FURUNO

CODE NO.	000-027-927	66AM-X-9403
TYPE	CP66-00800	

工事材料表 INSTALLATION MATERIALS	DS-30	ドップラソナー DOPPLER SONAR DOCKING SYSTEM	

番号 No.	名称 NAME	略図 OUTLINE	型名／規格 DESCRIPTIONS	数量 Q'TY	用途／備考 REMARKS
21	グランドパッキン CABLE GLAND PACKING	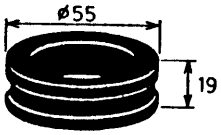	66-019-4201-0 CR CODE NO. 100-176-510	1	送受信器用 FOR TRANSCEIVER
			CODE NO.		
			CODE NO.		
			CODE NO.		
			CODE NO.		
			CODE NO.		
			CODE NO.		
			CODE NO.		
			CODE NO.		
			CODE NO.		

非防爆型送受信器選択の時
FOR NORMAL TYPE TRANSCEIVER

図番 (3/3)
DWG. NO. C7236-M16-A

FURUNO ELECTRIC CO., LTD

www.reelschematic.com

FURUNO

CODE NO.	002-876-310	66AM-X-9415 -5
TYPE	CP66-00840	1/2

工事材料表

INSTALLATION MATERIALS

番 号 NO.	名 称 NAME	略 図 OUTLINE	型名／規格 DESCRIPTIONS	数量 Q'TY	用途／備考 REMARKS
1	防水ｺﾞﾑ RUBBER PACKING	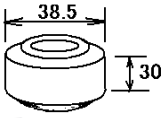	66-019-1202-0 CODE NO. 100-178-550	1	
2	座金 COUNTERSUNK WASHER	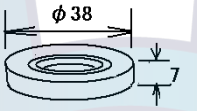	66-019-1203-1 CODE NO. 100-178-561	1	
3	ｹｰﾌﾞﾙｸﾞﾗﾝﾄﾞ CABLE GLAND		66-019-1204-1 CODE NO. 100-178-571	1	
4	平座金 FLAT WASHER	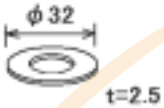	66-019-1205-1 CODE NO. 100-176-531	3	
5	ｷｬｯﾌﾟ LID	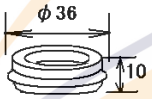	66-019-1983-1 CODE NO. 100-176-521	3	
6	六角ﾎﾞﾙﾄ HEX.BOLT	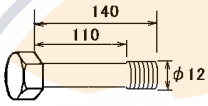	66-019-1984-3 CODE NO. 100-214-533	3	
7	ﾊﾞﾈ座金 SPRING WASHER	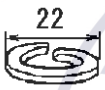	M12 SUS316L CODE NO. 000-808-957	6	
8	ｽﾌﾟﾘﾝｸﾞﾜｯｼｬ SPRING WASHER		M6 ﾁﾀﾝ(TB340) CODE NO. 000-808-591	2	
9	六角ﾅｯﾄ 1ｼｭ HEX.NUT	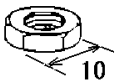	M6 ﾁﾀﾝ(TB340) CODE NO. 000-808-590	2	
10	ﾏﾙﾋﾗﾜｯｼｬ FLAT WASHER		M6 ﾁﾀﾝ(TB340) CODE NO. 000-808-592	2	

66AM-X-9415

FURUNO ELECTRIC CO ., LTD.

（略図の寸法は、参考値です。 DIMENSIONS IN DRAWING FOR REFERENCE ONLY.）

www.reelschematic.com

FURUNO

CODE NO.	002-876-310	66AM-X-9415 -5
TYPE	CP66-00840	2/2

工事材料表

INSTALLATION MATERIALS

番 号 NO.	名 称 NAME	略 図 OUTLINE	型名／規格 DESCRIPTIONS		数量 Q'TY	用途／備考 REMARKS
11	六角ﾎﾞﾙﾄ ｽﾘｷｽﾞﾘ HEX.BOLT	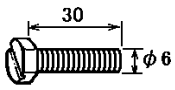	M6X30 SUS316L		1	
			CODE NO.	000-150-024		

66AM-X-9415

FURUNO ELECTRIC CO ., LTD.

(略図の寸法は、参考値です。 DIMENSIONS IN DRAWING FOR REFERENCE ONLY.)

www.reelschematic.com

FURUNO

CODE NO.	
TYPE	

工事材料表 INSTALLATION MATERIALS	DS-30 トップラソナー DOPPLER SONER DOCKING SYSTEM (信号ケーブル SIGNAL CABLE)

番号 No.	名称 NAME	略図 OUTLINE	型名／規格 DESCRIPTIONS	数量 Q'TY	用途／備考 REMARKS
1	10対ケーブル 10P TWISTED PAIR CABLE	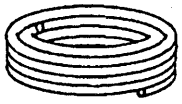 L=30m	13S4012 (CO-SPEVV-SB-C 0.2X10P *30M*) CODE NO. 000-560-424	1	DS-300 ⇔ DS310
2	信号ケーブル組品 SIGNAL CABLE ASSY.	L=5m	S66-5-5 (CO-SPEVV-SB-C 0.2X5P *5M*) CODE NO. 002-876-230	1	DS-310 ⇔ DS-340
3	信号ケーブル組品 SIGNAL CABLE ASSY.	L=0.8m	S66-6-0.8 (EV-S 40/0.08*15C *0.8M*) CODE NO. 002-876-240	1	DS300 ⇔ DS-301
4	信号ケーブル組品 SIGNAL CABLE ASSY.	L=30m	S66-7-30 (EV-S 40/0.08*15C *30M*) CODE NO. 002-876-250	*	DS-300 ⇔ DS-301 延長用 EXTENTION
5	5対ケーブル 5P TWISTED PAIR CABLE		13S8104 (CO-SPEVV-SB-C 0.2X5P *(M)) CODE NO. 000-560-416	*	NMEA/CIF
			CODE NO.		
			CODE NO.		
			CODE NO.		
			CODE NO.		
			CODE NO.		

*;オプション支給品。 OPTION SUPPLY.
NO.3は操作部に取付済。
NO.3 IS CONNECTED TO DS-301.

図番 (1/1)
DWG. NO. C7236-M13-B

FURUNO ELECTRIC CO., LTD

www.reelschematic.com

FURUNO

CODE NO.		66AM-X-9413
TYPE		

工事材料表 INSTALLATION MATERIALS	トッップラソナー DS-30 DOPPLER SONAR DOCKING SYSTEM (信号ケーブル SIGNAL CABLE)	

番号 No.	名称 NAME	略図 OUTLINE	型名／規格 DESCRIPTIONS	数量 Q'TY	用途／備考 REMARKS
1	10対ケーブル 10P TWISTED PAIR CABLE	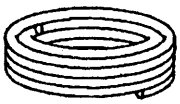 L=30m	13S4012 (CO-SPEVV-SB-C 0.2X10P *30M*) CODE NO. 000-560-424	1	副指示器用 FOR SUB DISPLAY

図番 (1/1)
DWG. NO. C7236-M18-A

FURUNO ELECTRIC CO., LTD

FURUNO

CODE NO.	002-884-990	
TYPE	SP66-00512	

工事材料表 INSTALLATION MATERIALS	DS-30 トッップラソナー DOPPLER SONER DOCKING SYSTEM (DS-331 船底部 FOR DS-331 HULL UNIT)	

番号 No.	名称 NAME	略図 OUTLINE	型名／規格 DESCRIPTIONS	数量 Q'TY	用途／備考 REMARKS
1	シリコンコ゛ム SILICONE SEALANT	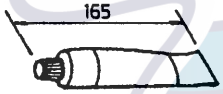	G30M CODE NO. 000-824-012	1	工事用工具 INSTALLATION TOOL
2	締付ハンドル CABLE GLAND SPANNER	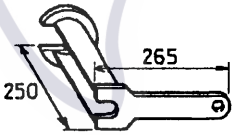	66-019-1253-0 CODE NO. 100-176-500	1	工事用工具 INSTALLATION TOOL

工事使用後、船上備品として保管してください。

TO BE KEPT IN VESSEL AS MAINTENANCE TOOL AFTER INSTALLATION.

（略図の寸法は、参考値です。）

図番 (1/1)
DWG. NO. C7236-M33-B

FURUNO ELECTRIC CO., LTD

www.reelschematic.com

オプション支給工材 Optional Installation Materials

No.	用途 Used for	型式 Type	コード番号 Code No.
1	主指示器防滴用 Splash-proofing main display	66-019-2192	100-180-730
2	主指示器埋込装備用 Flush mounting of main display	66-019-2194	100-180-740
3	操作箱卓上装備用 Tabletop mounting of operation panel	OP66-2	002-876-370
4	操作箱埋込装備用 Flush mounting of operation panel	66-019-2593	100-180-860
5	操作箱ケーブル延長用 Extension of operation panel cable	CP66-00900	000-028-826
6	分配器 DS-370 用 Distribution unit DS-370	CP66-00811	002-876-550
7	接続箱 DS-360 用 Junction box DS-360	CP66-00810	002-876-490
8	レートジャイロ DS-340 用 Rate-of-turn gyro DS-340	CP66-00806	002-876-470
9	デジタル指示器 DS-350 用 Digital indicator DS-350	CP66-00807	002-876-510
10	デジタル指示器 DS-351 用 Digital indicator DS-351	CP66-00808	002-876-530
11	デジタル指示器 DS-351 埋込装備用 Flush mount of DS-351	66-019-5595	100-178-750
12	リモート箱用 Remote box	CP66-00809	002-876-480
13	フランジ付送受波器タンク用 Transducer casing with flange	OP66-1	002-876-360
14	レンジ切換器 DS-389 用 Range switch box DS-389	CP66-01000	002-880-060

www.reelschematic.com

FURUNO

CODE NO.	100-180-730	66AM-X-9418-1
TYPE	66-019-2192	

工事材料表 INSTALLATION MATERIALS

DS-30 トッププラソナー DOPPLER SONAR DOCKING SYSTEM

番号 No.	名称 NAME	略図 OUTLINE	型名／規格 DESCRIPTIONS	数量 Q'TY	用途／備考 REMARKS
1	通風窓 (3) VENTILATOR	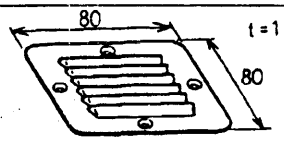	66-019-2192-0 A5052P-H32 ニュートンNO.5 CODE NO. 100-180-730	1	指定色；SPECIFIED COLOR

主指示器（防滴用）
MAIN DISPLAY (FOR SPLASH PROOF)

図番 (1/1)
DWG. NO. C7236-M26-C

FURUNO

CODE NO.	100-180-740	66AM-X-9419-1
TYPE	66-019-2194	

工事材料表 INSTALLATION MATERIALS

DS-30 トッププラソナー DOPPLER SONAR DOCKING SYSTEM

番号 No.	名称 NAME	略図 OUTLINE	型名／規格 DESCRIPTIONS	数量 Q'TY	用途／備考 REMARKS
1	取付板 (1) FIXING PLATE(1)	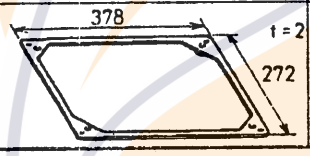	66-019-2194-0 SPCC MFZN4-C CODE NO. 100-180-740	1	

主指示器（埋込用）
MAIN DISPLAY (FLUSH MOUNT)

図番 (1/1)
DWG. NO. C7236-M27-B

FURUNO

CODE NO.	002-876-370	66AM-X-9420-1
TYPE	OP66-2	

工事材料表 INSTALLATION MATERIALS

DS-30 トッププラソナー DOPPLER SONAR DOCKING SYSTEM

番号 No.	名称 NAME	略図 OUTLINE	型名／規格 DESCRIPTIONS	数量 Q'TY	用途／備考 REMARKS
1	パネルスペーサ (4) PANEL SPACER (4)	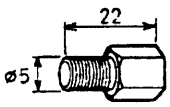	66-019-2591-1 SS400 MFNI2 CODE NO. 100-178-841	4	

操作箱（卓上用）
OPERATION PANEL (BULKHEAD MOUNT)

図番 (1/1)
DWG. NO. C7236-M28-B

www.reelschematic.com

FURUNO

CODE NO.	100-180-860	66AM-X-9421-1
TYPE	66-019-2593	

工事材料表 INSTALLATION MATERIALS

DS-30 トップラソナー DOPPLER SONAR DOCKING SYSTEM

番号 No.	名称 NAME	略図 OUTLINE	型名／規格 DESCRIPTIONS	数量 Q'TY	用途／備考 REMARKS
1	取付板(2) FIXING PLATE(2)	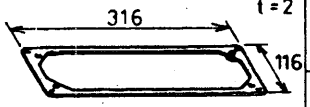	66-019-2593-0 SPCC MFZN4-C CODE NO. 100-180-860	1	

操作箱（埋込用）
OPERATION PANEL (FLUSH MOUNT)

図番 DWG. NO. C7236-M29-B (1/1)

FURUNO ELECTRIC CO., LTD

FURUNO

CODE NO.	000-028-862	66AM-X-9414-1
TYPE	CP66-00900	

工事材料表 INSTALLATION MATERIALS

トップラソナー DS-30 DOPPLER SONAR DOCKING SYSTEM
操作箱ケーブル OPERATION PANEL CABLE

番号 No.	名称 NAME	略図 OUTLINE	型名／規格 DESCRIPTIONS	数量 Q'TY	用途／備考 REMARKS
1	信号ケーブル組品 SIGNAL CABLE ASSY.		S66-8-30 (EV-S 40/0.08X15C *30M*) CODE NO. 002-876-380	1	副指示器 操作箱用 FOR SUB-DISPLAY/OPERATION PANEL
2	コネクタ CONNECTOR	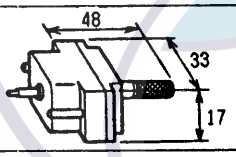	00-8016-020-000-701V CODE NO. 000-128-949	1	
3	トロイダルコア TOROIDAL FERRITE CORE	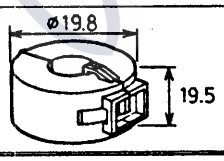	TFC-16-8-16 CODE NO. 000-129-907	1	

CP66-00910
002-884-130

図番 DWG. NO. C7236-M19-B (1/1)

FURUNO ELECTRIC CO., LTD

www.reelschematic.com

FURUNO

CODE NO.	002-876-550	66AM-X-9412
TYPE	CP66-00811	

工事材料表 INSTALLATION MATERIALS	DS-30	トッププラソナー DOPPLER SONAR DOCKING SYSTEM 分配器 DISTRIBUTION BOX	

番号 No.	名称 NAME	略図 OUTLINE	型名／規格 DESCRIPTIONS	数量 Q'TY	用途／備考 REMARKS
1	圧着端子 CRIMP-ON LUG	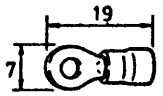	FV1.25-M4 赤 RED CODE NO. 000-536-715	15	
2	圧着端子 CRIMP-ON LUG	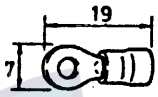	FV1.25-M3 赤 RED CODE NO. 000-538-110	80	
3	アース銅板 *鉄付* COPPER STRAP /W STEEL PLATE	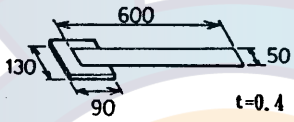	0.4X50X600MM CODE NO. 000-810-253	1	
			CODE NO.		
			CODE NO.		
			CODE NO.		
			CODE NO.		
			CODE NO.		
			CODE NO.		
			CODE NO.		

図番 DWG. NO. C7236-M12-B (1/1)

FURUNO ELECTRIC CO., LTD

www.reelschematic.com

FURUNO

CODE NO.	002-876-490	66AM-X-9411
TYPE	CP66-00810	

工事材料表 INSTALLATION MATERIALS	DS-30	ドップラソナー DOPPLER SONAR DOCKING SYSTEM 接続箱 JUNCTION BOX	

番号 No.	名称 NAME	略図 OUTLINE	型名／規格 DESCRIPTIONS	数量 Q'TY	用途／備考 REMARKS
1	圧着端子 CRIMP-ON LUG	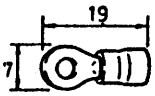	FV1.25-M4 赤 RED CODE NO. 000-536-715	40	
2	+ナベ小ネジ PANHEAD SCREW	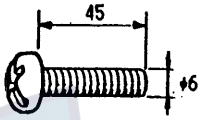	M6X45 SUS304 CODE NO. 000-804-666	4	
3	アース銅板 *鉄付* COPPER STRAP /W STEEL PLATE	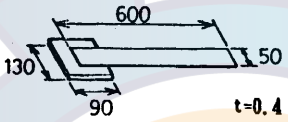	0.4X50X600MM CODE NO. 000-810-253	1	
4	六角ナット 1種 HEX. NUT	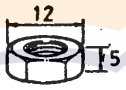	M6 SUS304 CODE NO. 000-863-109	8	
5	ミカキ平座金 FLAT WASHER		M6 SUS304 CODE NO. 000-864-129	4	
6	バネ座金 SPRING WASHER		M6 SUS304 CODE NO. 000-864-260	4	
7	グランドパッキン CABLE GLAND PACKING	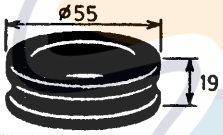	66-019-4201-0 CR CODE NO. 100-176-510	2	
			CODE NO.		
			CODE NO.		
			CODE NO.		

図番 DWG. NO. C7236-M11-B (1/1)

FURUNO ELECTRIC CO., LTD

www.reelschematic.com

FURUNO

CODE NO.	002-876-470	66AM-X-9407
TYPE	CP66-00806	

工事材料表 INSTALLATION MATERIALS	DS-30	トップラソナー DOPPLER SONAR DOCKING SYSTEM レートジャイロ RATE-OF-TURN GYRO	

番号 No.	名称 NAME	略図 OUTLINE	型名／規格 DESCRIPTIONS	数量 Q'TY	用途／備考 REMARKS
1	圧着端子 CRIMP-ON LUG	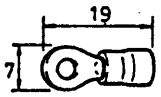	FV1.25-M3 赤 RED CODE NO. 000-538-110	3	
2	六角ボルト HEX. BOLT	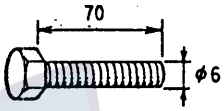	M6X70 SUS304 CODE NO. 000-862-287	4	
3	六角ナット 1種 HEX. NUT	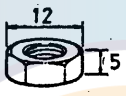	M6 SUS304 CODE NO. 000-863-109	8	
4	ミカキ平座金 FLAT WASHER		M6 SUS304 CODE NO. 000-864-129	4	
5	バネ座金 SPRING WASHER		M6 SUS304 CODE NO. 000-864-260	4	
6	アジャストワッシャ ADJUSTING WASHER	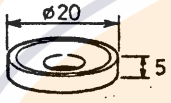	66-019-6301-0 SUS303 CODE NO. 100-176-550	8	
7	信号ケーブル組品 SIGNAL CABLE ASSY.	L=5m	S66-9-5(7P) (CO-SPEVV-SB-C 0.2X5P *5M*) CODE NO. 002-884-530	1	DS-340 ⟷ DS310
			CODE NO.		
			CODE NO.		
			CODE NO.		

図番 DWG. NO. C7236-M07-B (1/1)

FURUNO ELECTRIC CO., LTD

www.reelschematic.com

FURUNO

CODE NO.	002-876-510	66AM-X-9408-1
TYPE	CP66-00807	

工事材料表 INSTALLATION MATERIALS	DS-30	ドップラソナー DOPPLERSONARDOCKINGSYSTEM ディジタル指示器（LCD仕様） DIGITAL INDICATOR(LCD)	

番号 No.	名称 NAME	略図 OUTLINE	型名／規格 DESCRIPTIONS	数量 Q'TY	用途／備考 REMARKS
1	ビニール線 VINYL WIRE	L=5m	VSF-2.0SQ クロ *5M* BLK CODE NO. 000-121-401	1	
2	圧着端子 CRIMP-ON LUG	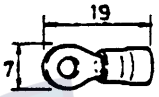	FV1.25-M3 アカ RED CODE NO. 000-538-110	12	
3	座金 WASHER	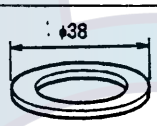	25.0X38.0X2.0 A5052P アロジン #1200 CODE NO. 000-804-663	2	
4	ステンレスキャッチクリップ LOCK	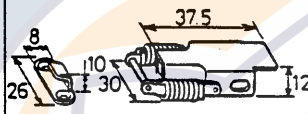	TL-11J NO.1 SUS304 CODE NO. 000-804-664	1	
5	+サラ小ネジ OVAL HEAD SCREW	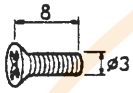	M3X8 SUS304 CODE NO. 000-861-270	4	
6	パッキン PACKING	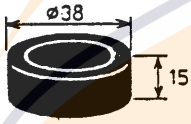	66-019-5021-0 CR CODE NO. 100-176-560	1	
7	シールワッシャー SEAL WASHER		03-001-3002-0 CODE NO. 300-130-020	4	
8	スーパースリーボンド ADHESIVE	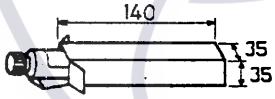	1211 50G CODE NO. 000-854-118	1	
			CODE NO.		
			CODE NO.		

（略図の寸法は、参考値です。）

図番 DWG. NO. C7236-M08-D (1/1)

FURUNO ELECTRIC CO., LTD

www.reelschematic.com

FURUNO

CODE NO.	002-876-530	66AM-X-9409
TYPE	CP66-00808	

工事材料表 INSTALLATION MATERIALS	DS-30	ドップラソナー DOPPLER SONAR DOCKING SYSTEM

番号 No.	名称 NAME	略図 OUTLINE	型名／規格 DESCRIPTIONS	数量 Q'TY	用途／備考 REMARKS
1	ビニール線 VINYL WIRE	L=5m	VSF2.0SQ 黒 *5M* BLK CODE NO. 000-121-401	1	
2	圧着端子 CRIMP-ON LUG	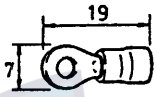 19 7	FV1.25-M3 赤 RED CODE NO. 000-538-110	12	
3	六角ナット3種 HEX. NUT	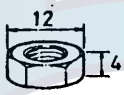 12 4	M6 SUS304 CODE NO. 000-804-665	4	
4	六角ナット 1種 HEX. NUT	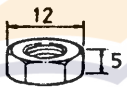 12 5	M6 SUS304 CODE NO. 000-863-109	8	
5	ミカキ平座金 FLAT WASHER	φ13	M6 SUS304 CODE NO. 000-864-129	4	
6	バネ座金 SPRING WASHER	12	M6 SUS304 CODE NO. 000-864-260	4	
7	パネルスペーサ(2) PANEL SPACER(2)	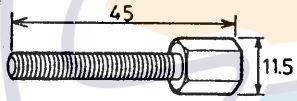 45 11.5	66-019-2514-1 SS400 MFZN4-C CODE NO. 100-176-571	4	
			CODE NO.		
			CODE NO.		
			CODE NO.		

デジタル指示器(LED仕様) DS-351用
FOR DS-351 DIGITAL INDICATROR(LED)

図番 (1/1)
DWG. NO. C7236-M09-C

FURUNO ELECTRIC CO., LTD

www.reelschematic.com

FURUNO

CODE NO.	100-178-750	66AM-X-9422-1
TYPE	66-019-5595	

工事材料表 INSTALLATION MATERIALS	DS-30	ﾄﾞｯﾌﾟﾗｿﾅｰ DOPPLER SONAR DOCKING SYSTEM	

番号 No.	名称 NAME	略図 OUTLINE	型名／規格 DESCRIPTIONS	数量 Q'TY	用途／備考 REMARKS
1	取付板 FIXING PLATE	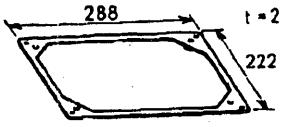	66-019-5595-0 SPCC MFZN4-C CODE NO. 100-178-750	1	

デジタル指示器 DS-351用
FOR DS-351 DIGITAL INDICATOR

図番 DWG. NO. C7236-M30-B (1/1)

FURUNO ELECTRIC CO., LTD

FURUNO

CODE NO.	002-876-480	66AM-X-9410
TYPE	CP66-00809	

工事材料表 INSTALLATION MATERIALS	DS-30	ﾄﾞｯﾌﾟﾗｿﾅｰ DOPPLER SONAR DOCKING SYSTEM	

番号 No.	名称 NAME	略図 OUTLINE	型名／規格 DESCRIPTIONS	数量 Q'TY	用途／備考 REMARKS
1	圧着端子 CRIMP-ON LUG	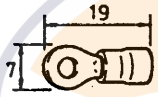	FV1.25-M3 赤 RED CODE NO. 000-538-110	6	
2	六角ナット 1種 HEX. NUT	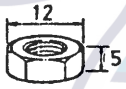	M6 SUS304 CODE NO. 000-863-109	8	
3	ﾐｶﾞｷ平座金 FLAT WASHER		M6 SUS304 CODE NO. 000-864-129	4	
4	ﾊﾞﾈ座金 SPRING WASHER		M6 SUS304 CODE NO. 000-864-260	4	

リモート箱 DS-359用
FOR DS-359 REMOTE BOX

図番 DWG. NO. C7236-M10-C (1/1)

FURUNO ELECTRIC CO., LTD

www.reelschematic.com

FURUNO

CODE NO.	002-876-360	66AM-X-9417-2
TYPE	OP66-1	

工事材料表 INSTALLATION MATERIALS

DS-30 ドップラソナー DOPPLER SONAR DOCKING SYSTEM

番号 No.	名称 NAME	略図 OUTLINE	型名／規格 DESCRIPTIONS	数量 Q'TY	用途／備考 REMARKS
1	フランジ FLANGE	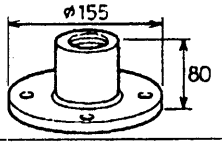	66-019-1252-0 SS41 MFZN4-C CODE NO. 100-178-440	1	
2	防水ゴム RUBBER PACKING	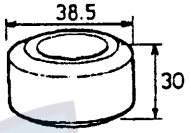	66-019-1202-0 CR CODE NO. 100-178-550	1	
3	座金 COUNTERSUNK WASHER	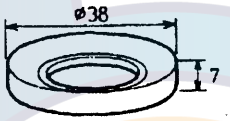	66-019-1203-0 SUS316 CODE NO. 100-178-560	1	
4	ケーブルグランド CABLE GLAND	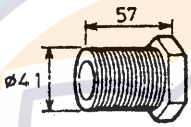	66-019-1204-0 SUS316 CODE NO. 100-178-570	1	
			CODE NO.		
			CODE NO.		
			CODE NO.		
			CODE NO.		
			CODE NO.		
			CODE NO.		

フランジ付タンク用
FOR HULL UNIT WITH FLANGE

図番 DWG. NO. C7236-M25-B (1/1)

FURUNO ELECTRIC CO., LTD

www.reelschematic.com

FURUNO

CODE NO.	002-880-060	66AM-X-9422
TYPE	CP66-01000	

工事材料表 INSTALLATION MATERIALS	DS-389	レンジ切換器 RANGE SWITCH	

番号 No.	名称 NAME	略図 OUTLINE	型名／規格 DESCRIPTIONS	数量 Q'TY	用途／備考 REMARKS
1	圧着端子 CRIMP-ON LUG	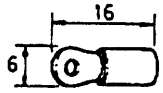	FV1.25-3 アカ RED CODE NO. 000-538-113	6	
2	六角ナット 1種 HEX. NUT	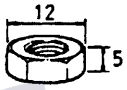	M6 SUS304 CODE NO. 000-863-109	8	
3	ミカ"キ平座金 FLAT WASHER		M6 SUS304 CODE NO. 000-864-129	4	
4	ハ"ネ座金 SPRING WASHER		M6 SUS304 CODE NO. 000-864-260	4	
			CODE NO.		
			CODE NO.		
			CODE NO.		
			CODE NO.		
			CODE NO.		
			CODE NO.		

図番 (1/1)
DWG. NO. C7236-M32-A

FURUNO ELECTRIC CO., LTD

www.reelschematic.com

FURUNO

CODE NO.	002-880-320	66AM-X-9423 -6
TYPE	CP66-01210	1/1

工事材料表

INSTALLATION MATERIALS

番 号 NO.	名 称 NAME	略 図 OUTLINE	型名／規格 DESCRIPTIONS	数量 Q'TY	用途／備考 REMARKS
1	ﾊﾞﾈ座金 SPRING WASHER		M16 SUS316L CODE NO. 000-808-959	8	
2	六角ﾅｯﾄ１種 HEX.NUT	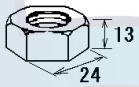	M16 SUS316L CODE NO. 000-808-962	8	
3	六角ﾎﾞﾙﾄ HEX.BOLT	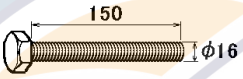	M16X150 SUS316Lｾﾞﾝﾈｼﾞ CODE NO. 000-808-969	8	
4	ﾊﾞﾈ座金 SPRING WASHER	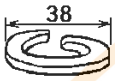	M22 SUS316L CODE NO. 000-808-960	32	
5	六角ﾅｯﾄ HEX.NUT	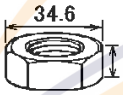	M22 SUS316L CODE NO. 000-808-961	32	
6	六角ﾎﾞﾙﾄ HEX.BOLT	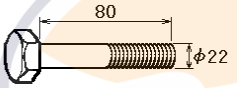	M22X80X50S SUS316L CODE NO. 000-808-963	32	
7	ｺｽﾓｸﾞﾘｰｽﾀﾞｲﾅﾏｯｸｽ COSMO GREASE DYNAMICS	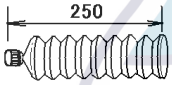	No.1 400G CODE NO. 000-149-265	1	

66AM-X-9423

FURUNO ELECTRIC CO ., LTD.

（略図の寸法は、参考値です。 DIMENSIONS IN DRAWING FOR REFERENCE ONLY.）

www.reelschematic.com

This page is intentionally left blank.

www.reelschematic.com

CHAPTER 1. GENERAL

The Furuno model DS-30 Doppler Sonar provides accurate measurement of the fore/aft and port/starboard speed of vessels. It mainly consists of display unit, processor unit, junction box, transceiver unit and transducer (hull unit).

1.1. Selecting Mounting Location

1.1.1. Transducer (Hull Unit)

The performance of the DS-30 is directly related to the mounting location of the transducer. Especially air bubbles and turbulence caused by movement of the ship and interference from other acoustic equipment seriously degrade performance. The mounting location should, therefore, be determined carefully, keeping the following factors in mind.

1) Air Bubbles

Since the transducer of the DS-30 is installed flush with the ship's hull bottom, it is susceptible to air bubbles which flow below the hull bottom. Select a location where air bubbles created at ship's bow do not go down to the mounting location. When the ship has a bulbous bow, install the transducer in it or just behind it. However, when the ship makes a voyage in high latitude area breaking through ice flows, avoid the location where broken ice flows may strike the location.

The DS-30 is used not only for ocean going navigation but also for docking to loading/unloading facilities, at which the bow and side thrusters are used. The transducer should be separated at least 4 or 5 meters from them.

NOTE: In extremely shallow harbors with soft bottom, whirls created by ship's movement cause air bubbles and also bottom materials to be stirred, which may make the use of DS-30 impossible.

2) Cavitation

Dents on ship's bottom cause whirls behind them and may sometimes cause cavitation which adversely affects the performance of the transducer, especially when the ship moves at a high speed.

The welded portion between the transducer casing and the ship's hull should therefore be finished as smooth as possible.

3) Variation of Draft Level

When the ship travels unloaded, the draft level goes low and air bubbles are apt to be pushed down to the transducer location. This occurs especially when the water level is

www.reelschematic.com

lower than the center line of the bulbous bow. It is recommended to load a proper amount of ballast not only for the DS-30 but also for safety of navigation.

4) Interference of Other Ultrasonic Equipment

If integer multiple of the transmission frequency of other ultrasonic equipment is within 440 ± 8 kHz, interference may occur. Select a location at least 1m away from the transducer of the ultrasonic equipment and change, if possible, the direction of its transmission beam so that the beam may not cross the beam of DS-30.

5) Installation in Dangerous Place

Do not install the transducer in the oil tank, oil room, LPG gas room and freezing room.

6) Maintenance Space

The transducer is detachable/replaceable in the water from outside the ship.

1.1.2. Other Indoor Units

All units are designed and constructed to withstand humidity and corrosive atmosphere common to a vessel. However certain guidelines must be observed to ensure continued operation. When selecting a mounting location, keep the following points in mind.

1) Avoid place subject to high temperature/humidity. This includes heat emitting apparatuses and sunshine.

2) Avoid places subject to sea splash. Sea splashes most assuredly damage the sensitive components inside units.

3) Locate the units where they will not become soiled easily. Never locate it near exhaust pipes.

4) Select a place where vibration is minimal.

5) Select a place with sufficient ventilation.

www.reelschematic.com

1.2. Grounding

All units use pulse signals. Thus, insufficient grounding of the units may cause interference to other electronic equipment on board such as radio direction finder and radio receivers. To minimize unwanted radio radiation, perform the cabling and grounding works with due consideration of the following remarks.

1) Do not run cables near radio apparatuses. Do not also run them near or in contact with the cables of radio apparatuses.

2) Make cable run as short as possible, taking the shortest route.

3) Ground all units by using a copper strap.

4) To connect the copper strap to a copper plate, use silver solder or solder cream to ensure solid connection.

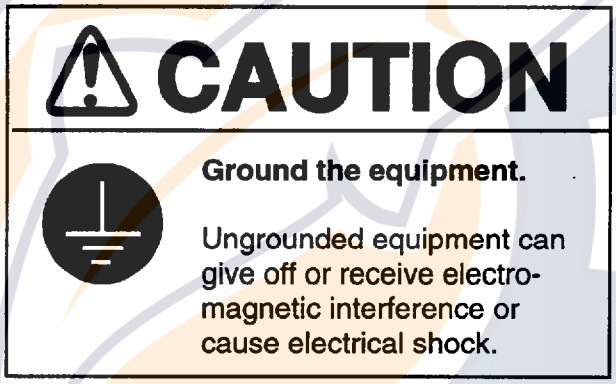

www.reelschematic.com

CHAPTER 2. MOUNTING

2.1. Main Display and Operation Panel

Select mounting locations taking the following points into account.

1) Select a place where operating personnel are able to control the units easily while observing the area surrounding the vessel.

2) Select a place not exposed to direct sunlight, water splashes and hot air.

2.1.1. Standard Mounting

1. Cut out the bulkhead and drill fixing holes as shown at right. Reinforce if necessary the bulkhead since the display unit weighs 10 kg approximately.

2. Four mounting bolts (M6) are factory-fitted at the back of the front panel. Fit them into the fixing holes and push in the unit.

3. Fix the unit by tightening the bolts with nuts (M6) fitted from the back of the bulkhead.

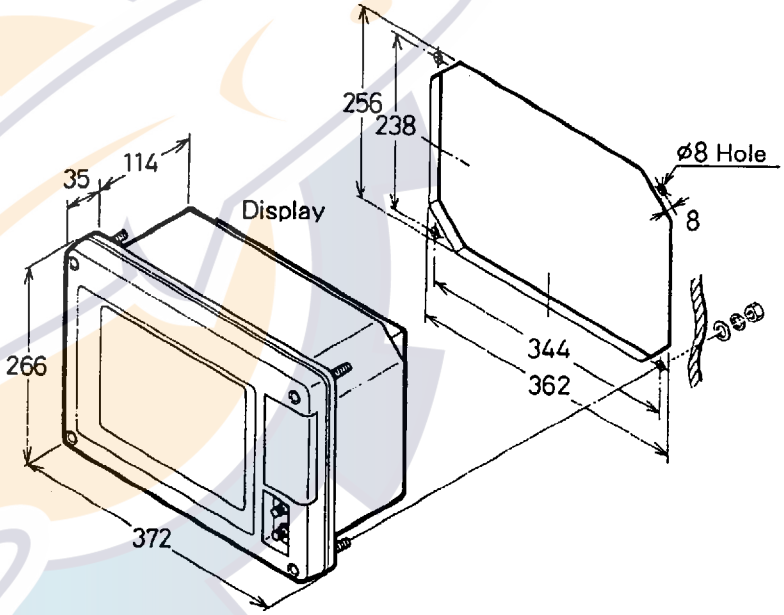

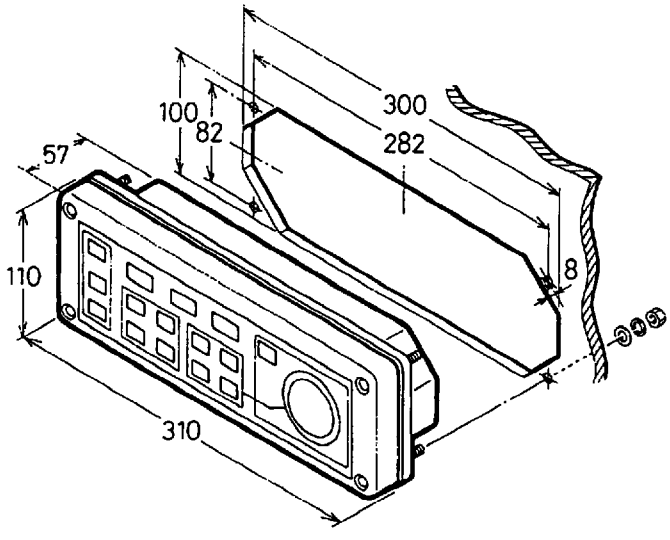

www.reelschematic.com

2.1.2. Mounting with Fixing Plate

When it is difficult to fit nuts from back of the bulkhead, use the fixing plate. The fixing plate is optional supply.

1. Cut out the bulkhead with dimensions shown in the figure below. (For those for the operation panel, refer to the next page.) Reinforce if necessary the bulkhead to withstand weight 10 kg of the display unit.

2. Detach the display panel from the cabinet by loosening screws (M5) at the four corners of the display panel. (① in the figure)

3. Remove nuts which fix the panel spacers at the four corners of the cabinet. The nuts removed are unnecessary. (② in the figure)

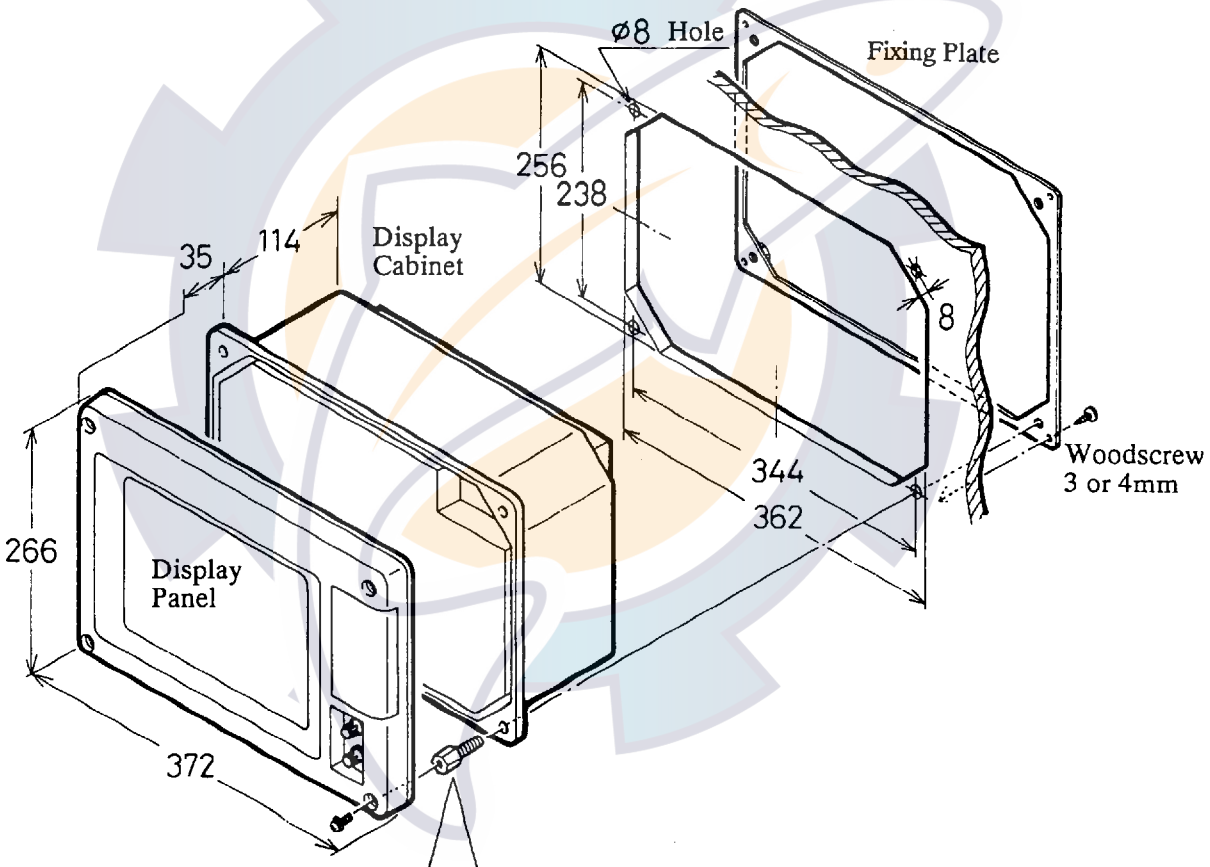

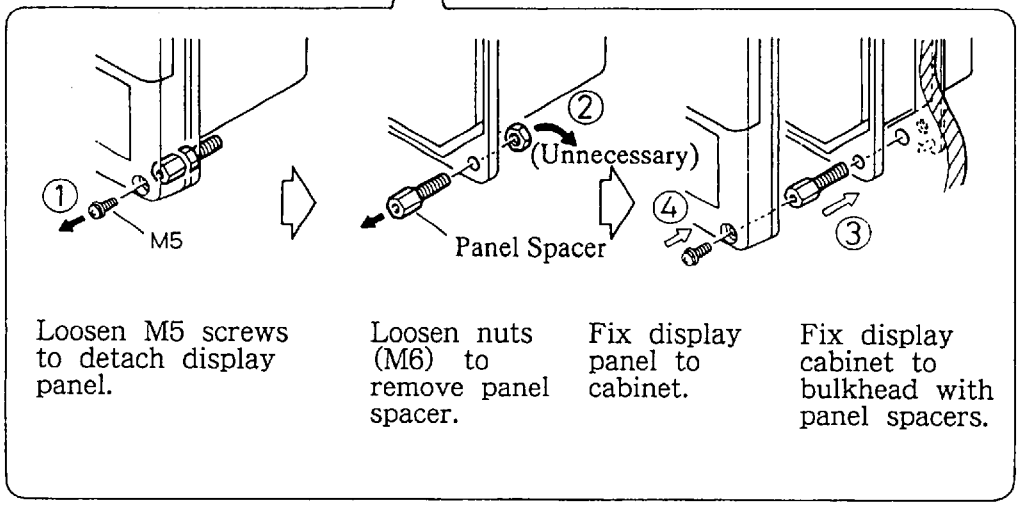

www.reelschematic.com

4. Attach the fixing plate to the back of the bulkhead by using woodscrews (3 or 4 mm). When space is insufficient to use woodscrews and a screwdriver, use glue or vinyl tape to tempolarily attach the fixing plate.

5. Fit the display unit to the cutout hole and insert the four panel spacers through the holes on display cabinet, bulkhead and mount plate. Then tighten the panel spacers securely to fix the cabinet.

6. Fix the display panel to the cabinet as before by using four screws (M5).

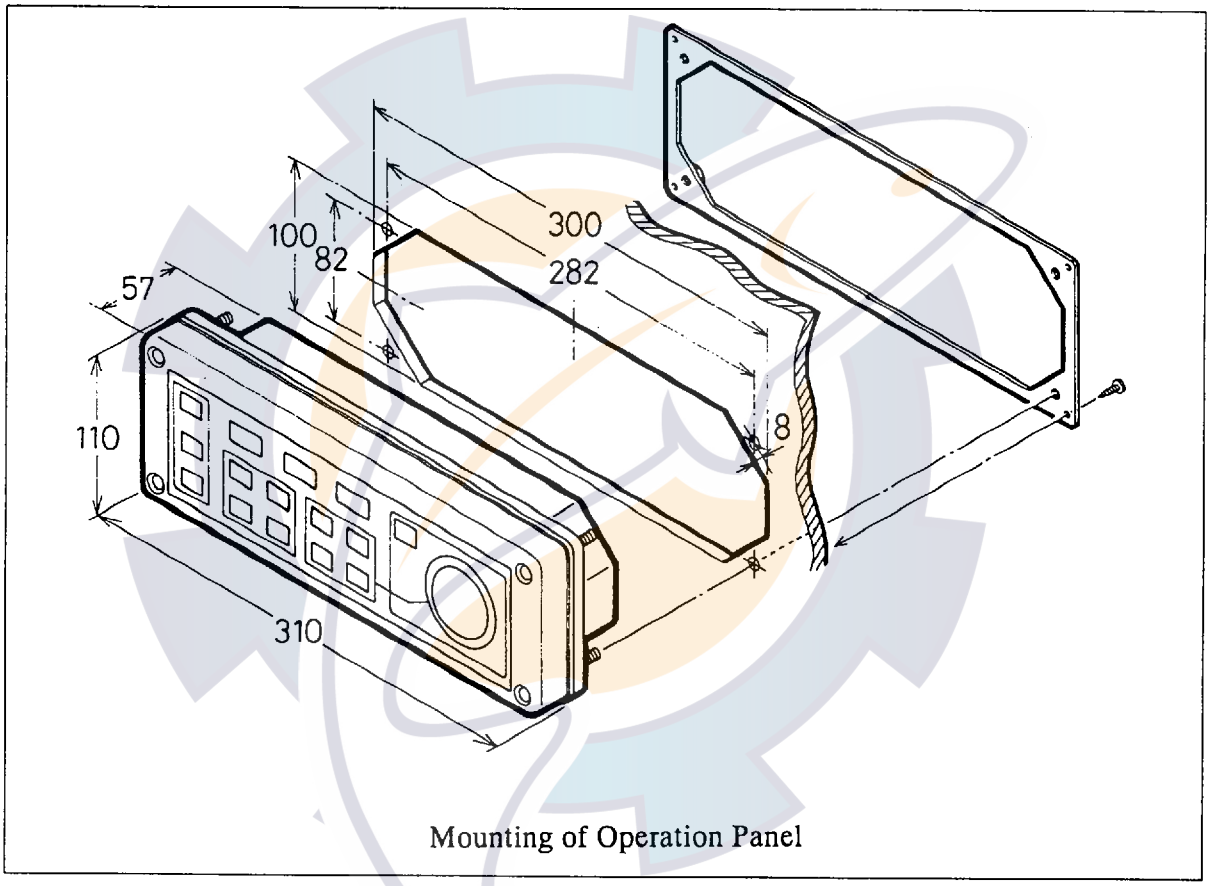

Mounting of Operation Panel

www.reelschematic.com

2.2. Processor Unit

Select a mounting location taking the following points into account.

1) Since the unit generates heat, select a well ventilated location with low humidity.

2) The unit can be bulkhead or floor mounted. When mounting on the bulkhead, reinforce the mounting location to withstand the unit weight of 40 kg.

2.2.1. Mounting Procedure

1. Fix four stud bolts on the selected location at intervals shown on the outline drawing. The bolt should stick out by 20 cm from the bulkhead (or floor).

2. Fit the mounting holes on the unit to the bolts and tighten the bolts by using nuts (M10).

2.3. Transceiver Unit

Select a mounting location, taking the following points into account.

1) Since the unit generates heat, select a well ventilated location with low humidity.

2) The unit can be bulkhead or floor mounted. When mounting on the bulkhead, reinforce the mounting location to withstand against the unit weight of 14 kg.

2.3.1 Mounting Procedure

1. Fix four mounting bolts on the selected location at intervals shown on the outline drawing so that bolt thread sticks out by 20 cm from the bulkhead (or floor).

2. Fit the mounting holes on the unit to the bolts and tighten the bolts by using nuts (M10).

2.4. Junction Box (Option)

The junction box can be floor or bulkhead mounted provided that the mounting location is strong enough to withstand the weight of 5 kg.

2.4.1. Mounting Procedure

1. Drill mounting holes on the mounting location, referring to the outline drawing.

2. Insert four bolts (M6x40) into mounting holes on the junction box and the mounting location.

www.reelschematic.com

3. Fix the juction box by tightening the bolts with nuts placed from back of the installation location.

2.5. Transducer (Hull Unit)

Refer to the installation instruction on page 2-5.

www.reelschematic.com

HULL UNIT INSTALLATION

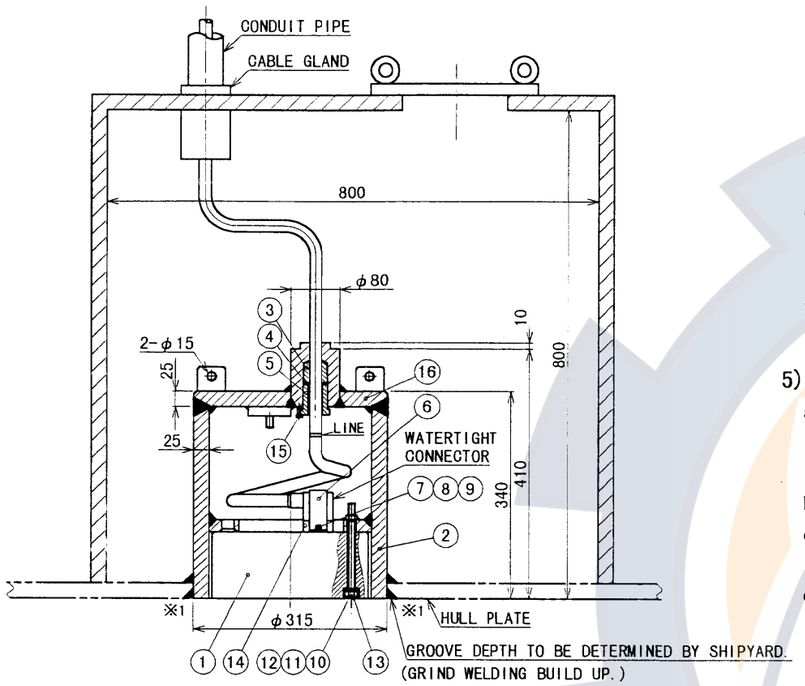

1) CHECKING MATERIAL AND THICKNESS OF TRANSDUCER CASING

Before starting the installation work, check that the transducer casing is of a material approved by ship classification society concerned and with a thickness not thinner than the hull plate. The standard tank supplied by FURUNO is of material KSTPG370 (KSTPG38, KST138), approved by ship Classification Society of Japan, with a thickness of 25 mm.

2) DETERMINING INSTALLATION SITE

Select the installation site reffering to the recommended sites described in the installation instructions.

For ships prone to collect air bubbles under the hull bottom, consult your local FURUNO office or agent for advice.

3) CONSTRUCTING WATERPROOF COMPARTMENT FOR TRANSDUCER CASING

The compartment for the transducer casing is not compulsory required by law because the transducer casing is waterproof. However it is recommended to construct it for safety. Dimensions shown above are only for reference; shipyard may change as required. Since the transducer is detachable/replaceable in water from outside the ship, maintenance space is not required inside the compartment.

4) WELDING CASING

a) Fore/aft marks are engroved on the casing. Align them with ship's fore-aft line.

b) Orientation and leveling errors can be offset on the data offset menu in the display unit. Install the casing as follows.

Fore-aft orientation: Align the bow mark on the casing with ship's fore-aft line to an accuracy within 1 degree.

Leveling: Install the casing so that the top face of the casing is horizontal during navigation. Measure leveling accuracy with a level meter, after the ship is launched.

c) Detach transducer (1), cable, cable gland (5) and gasket (3) before welding the casing.

d) Welding method for casing and ship's hull should be determined by the shipyard. Weld reinforcement ribs to the casing if the shipyard considers them necessary.

e) Remove welding build up between the casing and the ship's hull (part marked ※1 in the drawing) with a grinder, for a flat finish.

5) FIXING/CONNECTING TRANSDUCER CABLE

a) Lead the transducer cable into the casing up to the white line mark on the cable and tighten the cable gland with the cable gland spanner supplied.

b) Install locking bolt (15) after the cable gland is tightened.

c) Remove dirt and apply silicone grease onto the side of receptacle on the transducer before plugging the watertight connector.

d) To plug in the watertight connector, pull up the ring and insert the connector into the receptacle, and then fix the connector holder (6) with hex nut (7).

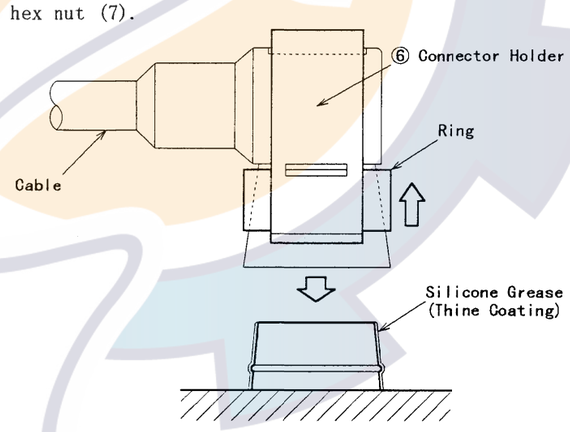

6) FIXING TRANSDUCER

Twisting the cable (namely, rotating the transducer by about one turn), align the bow mark on the transducer with ship's bow and fix the transducer by using hex bolt (10) and bolt cap (13).

7) CABLING

Lay the cable from the casing to the transceiver unit inside a conduit pipe and fill the conduit pipe with sand or other appropriate materials to prevent cable vibration.

8) PAINTING

Shop primer coating (Epcom Zinc Rich Primer B) has been applied to the casing. Paint both inner and outer surfaces on the casing with the paint used for top coating of the ship's hull bottom.

Note: The transducer surface is coated with antifouling paint Marine Star 20. Do not coat it by other type of paint.

9) TESTING AFTER INSTALLATION

Comfirm the ohm value of terminals on the transducer.

A digital ohmmeter is recommended.

Do not use a megohmmeter.

TYPE OF SIGNAL	TEST POINT	STANDARD(Ω)
BEAM 1 (BLK)	TB #1(RED) - #2(BLK)	0.5～3.0
BEAM 2 (RED)	TB #4(RED) - #5(BLK)	0.5～3.0
BEAM 3 (GRN)	TB #7(RED) - #8(BLK)	0.5～3.0
TEMP SENSOR 1	TB #10(YEL) - #11(WHT)	450～550
TEMP SENSOR 2	TB #13(BLU) - #14(GRY)	450～550

DRAWN Apr 13'00 T.YAMASAKI			TITLE DS-330/331
CHECKED Apr 13'00 Y.Kumi			NAME HULL UNIT
APPROVED APR 13'00 S.Yamamura	DS-30		INSTALLATION PROCEDURE
SCALE	MASS kg		REMARKS
DWG No. E7236-Y10- F			

www.reelschematic.com

2.6. Rate-of-Turn Gyro Unit (Option)

The rate-of-turn gyro unit should be installed, in a location with minimal vibration, so that the sensor inside the unit is level to within ±1°; error of up to ±2° can be corrected. There is no designation for orientation of the unit. Select the location considering that the cable for connection with the processor unit is 5m long.

2.6.1. Mounting Procedure

1. Fix four stud bolts on the selected location at intervals shown in the outline drawing.

2. Fix the unit by using adjust nuts, flat washers, spring washers and nuts supplied as installation materials as shown below.

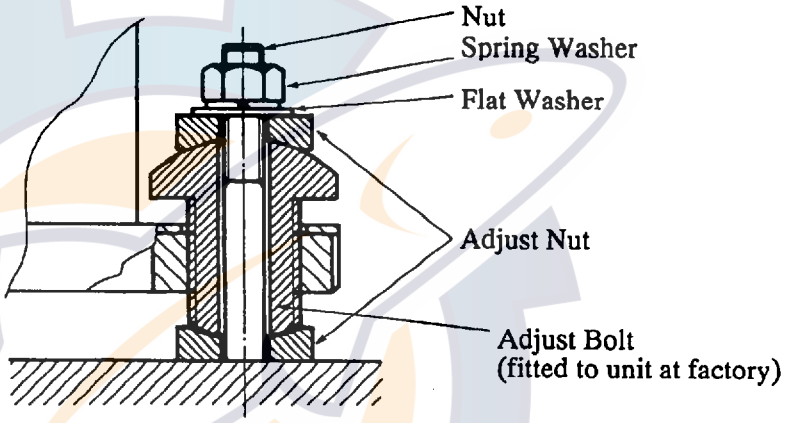

2.6.2. Leveling Adjustment

This adjustment should be performed while the ship is in dry-dock where it has no heeling and triming inclinations.

1. Place a T-type level meter on top of the sensor to measure longitudinal and transverse inclination.

2. For leveling the sensor, turn the adjust-bolts.

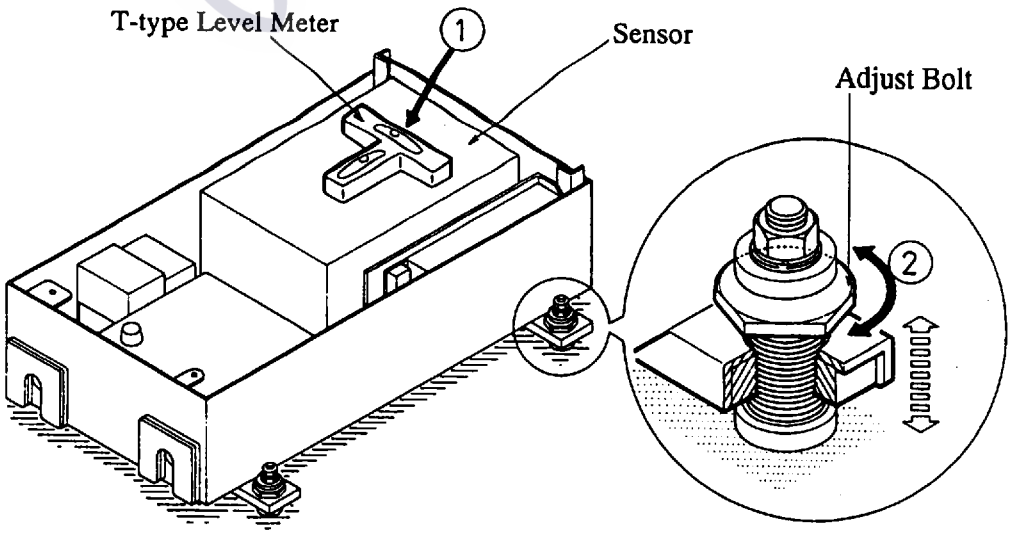

www.reelschematic.com

Error of Rate-of-Turn Gyro

The rate-of-turn gyro detects angular velocity of ship's motion, which sometimes contains the following errors.

Attitude Error

If the rate-of-turn gyro is not installed on the level or if the ship trims or heels, the angular velocity detected becomes Vt x cosθ", where Vt is the true angular velocity and θ is the inclination angle of the rate-of-turn gyro from the horizontal plane.

Motion Error

If the static attitude of the rate-of-turn gyro is level, the ship's rolling and pitching cause no error. However, if the ship has a trim which causes static inclination of the rate-of-turn gyro, an error occurs by ship's rolling. The error is given by Vr x sin λ, where Vr is the angular velocity of rolling and "λ" is the trim angle.

Latitude Error

Error caused by earth's rotation depends on latitude.

If latitude is expressed by "α" and earth's rotation angular velocity by Ω, then error ωE caused by earth's rotation is

$$\omega E = \Omega \times \sin \alpha$$

Error by Vibration and Shock

Shock and vibration in longitudinal, transverse and vertical directions do not cause error in gyro output if it's intensity is within the gyro specifications. However, note that actual shock and vibration contain angular velocity components which cause error. When the unit is installed in the bridge, the error may be negligible.

Note: The life of the sensor in the Rate-of-Turn Gyro is approx. 17,000 hours. When the elapsed time shown on the hour meter in the Rate-of-Turn Gyro, exceeds 17,000 hours, replace the sensor.

www.reelschematic.com

CHAPTER 3. WIRING

3.1. Precautions for Cable Installation

3.1.1. Cable between hull unit (transducer) and transceiver

This cable carries very weak signals with amplitude of less than 0.1uV which are easily interfered by noise. **Dedicate conduit exclusively for this cable.** For the conduit which runs vertically, fill it with sand or other appropriate materials to prevent cable vibration.

3.1.2. Cable between transceiver unit and processor unit (via junction box)

These cables carry echo signals with amplitudes of greater than 0.1 mV which can be interfered by noise from high eletcric power cables. Do not run them in a conduit together with the following cables.

1) Cable carrying more than few kilowatts power to fluctuating loads.

2) Cable carrying switching waves generated by thyristor, etc.

3) Transmission antenna cable of radio equipment.

Also observe the guidelines for "Other cables of DS-30", described below.

3.1.3. Other cables of DS-30

Observe the following guidelines to prevent noise, interference problem.

1) When the cables run in parallel with power cables, separate them 40 cm at minimum.

2) When the cables run in non-metallic conduit or duct behind a bulkhead, use an armored cable without protective covering and ground it every 50 cm.

www.reelschematic.com

3.2. Cable Specification

When the cables shown in the interconnection diagrams are not available, use their equivalent referring to the table below.

Cable Type	No. of Cores	Core size (mm)	Insulator Type	Shield Type	Armor	Outer Covering	Overall Diameter
CO-0.2x5P	5 pr	0.2	PVC	common	Yes	PVC	13.5
CO-0.2x10P	10pr	0.2	PVC	common	Yes	PVC	14.7
DPYCY-1.25	2	1.25	EP rubber	— —	Yes	PVC	13.4
TTYCYS-1	1 pr	1.25	PVC	common	Yes	PVC	13.3
TTYCYS-2	2 pr	1.25	PVC	common	Yes	PVC	18.1
TTYCYS-3	3 pr	1.25	PVC	common	Yes	PVC	19.0
TTYCY-4S	4 pr	1.25	PVC	individual	Yes	PVC	22.8
TTYCY-16S	16 pr	1.25	PVC	individual	Yes	PVC	39.2

⚠ CAUTION

Confirm that the power supply voltage is compatible with the voltage rating of the equipment.

Connection to the wrong power supply can cause fire or equipment damage. The voltage rating appears on the label at the rear of the equipment.

FURUNO

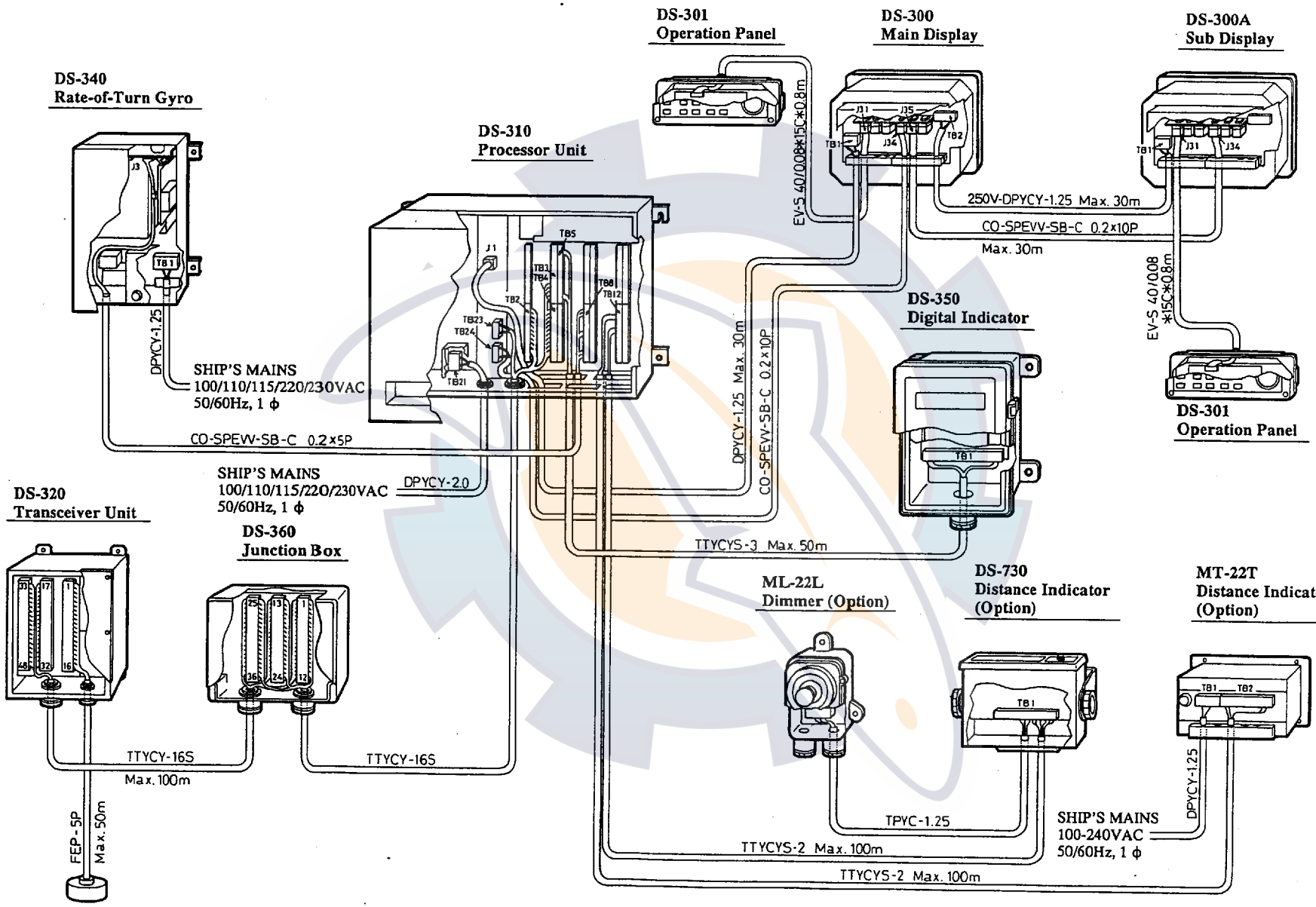

承認 APPROVED	MAY·26·'93 M. IKEDA	名称 TITLE	DS-30 Connector/Terminal Board Location (1/2)
検図 CHECKED	MAY·25·'93 OKAMOTO		
製図 DRAWN	MAY·25·'93 M. USUDA	図番 DWG.NO	E7236 – Y08 – A

www.reelschematic.com

FURUNO

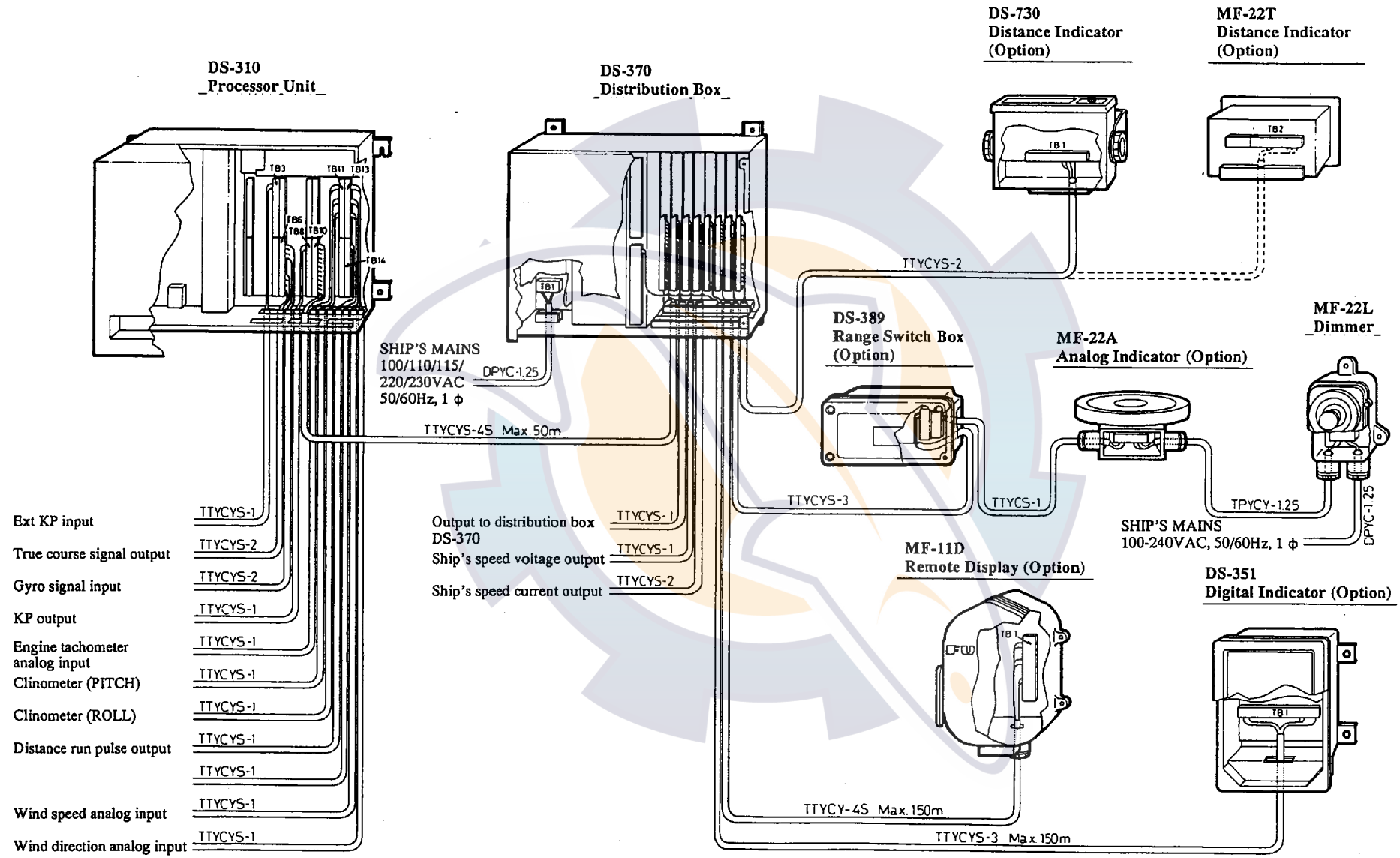

承認 APPROVED	May·27·'93 M. IKEDA	名称 TITLE	DS-30 Connector/Terminal Board Location (2/2)
検図 CHECKED	May·27·'93 OKAMOTO		
製図 DRAWN	MAY·27·'93 M. USUDA	図番 DWG.NO	E7236 – Y13 – A

www.reelschematic.com

www.reelschematic.com

3.3. Cable Fabrication

3.3.1. Transducer Cable

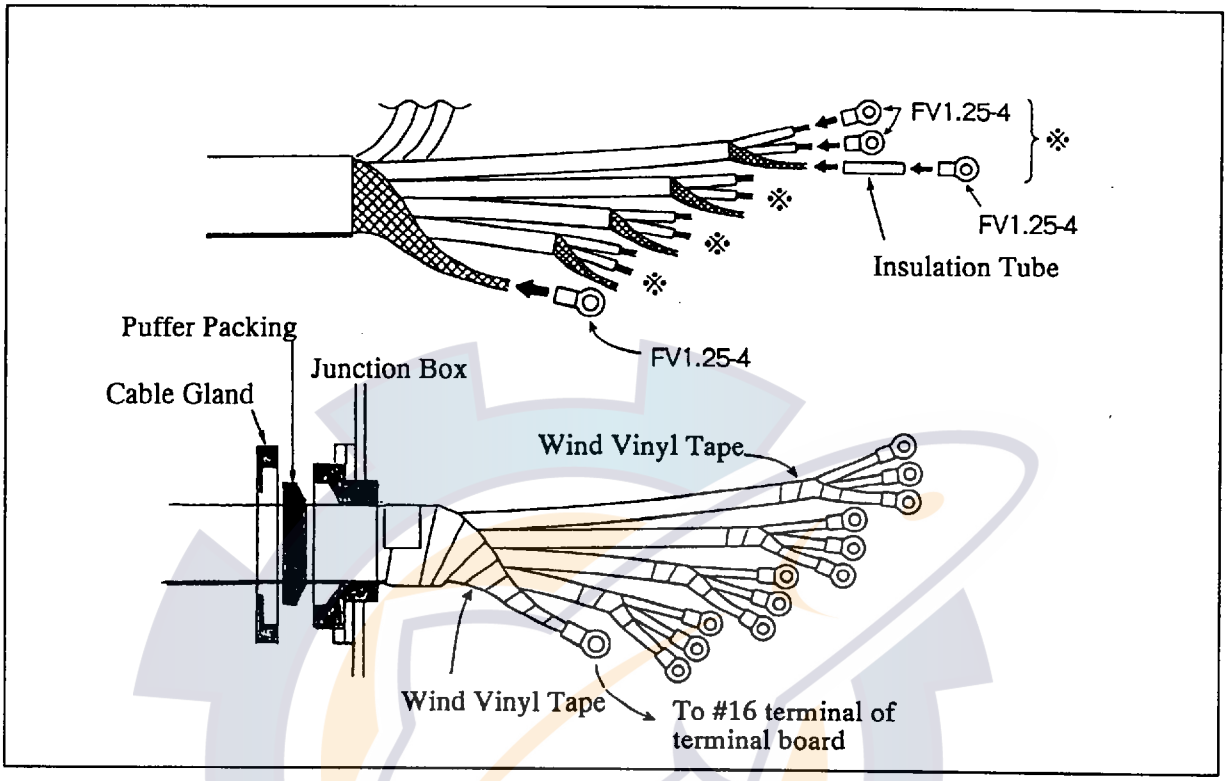

3.3.2. Cables between Transceiver Unit/Junction Box/Processor Unit (TTYCY-16S)

1) Transceiver Unit/Junction Box Side

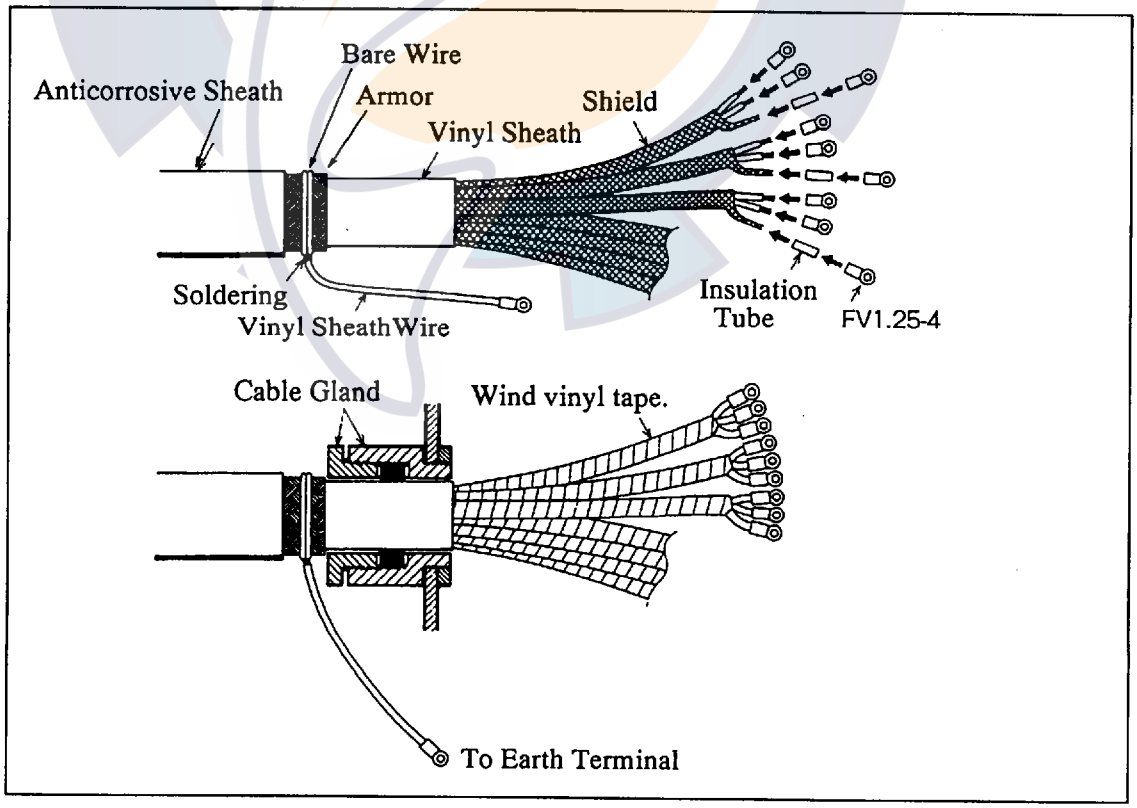

Note: Do not undo the shield at the entrance into the unit. Noise induction through unshielded wires cause equipment malfunction.

www.reelschematic.com

2) Processor Unit Side

Fabricate the wires and shield in the same way as the transceiver unit/junction box sides. For the cable armor, remove paint and ground it through the cable clamp.

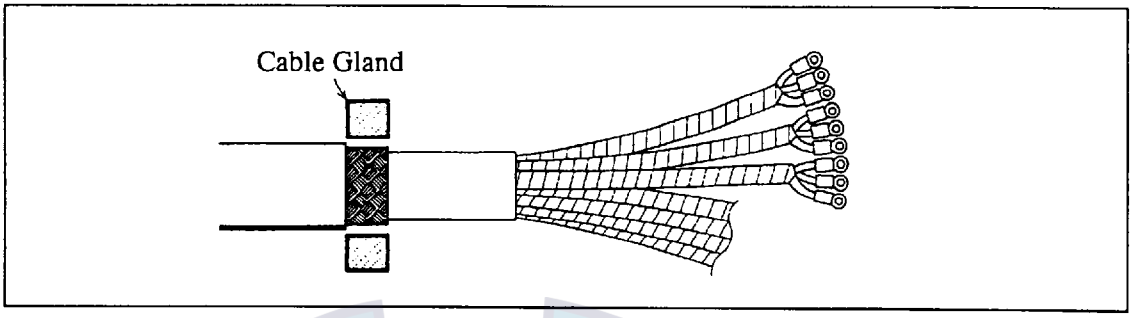

3.3.3. Cables between Processor Unit/Main Display Unit/Sub Display Unit (CO-SPEVV-SB-C 0.2x10P)

Connect the 20p connector as follows.

1) Cable Fabrication

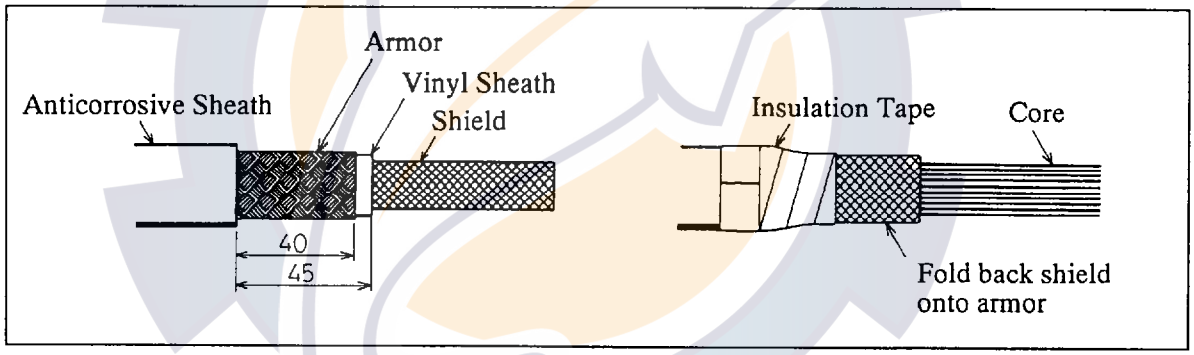

2) Crimping Tool and Crimping Method

A special crimping tool is necessary for connection of wires to the contact pins of 38P connector 00-8016-038-000-751. Also a pin extractor should be used to push out the contact pin from the connector body. The following describes how to crimp and extract the contact.

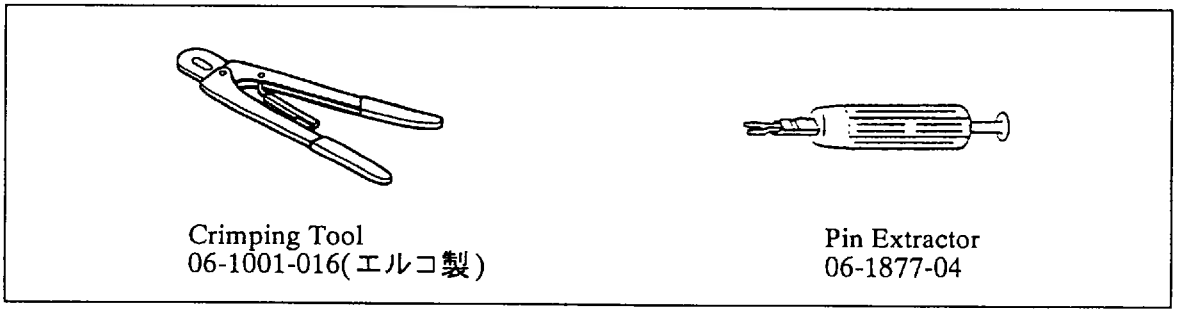

www.reelschematic.com

3) Wire Crimping Procedure

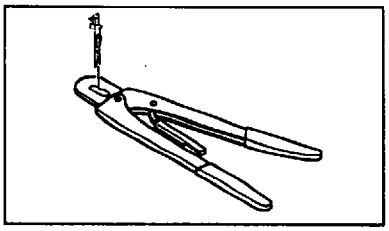

1. Strip the vinyl sheath of the wire to expose the core by 3mm to 4mm.

2. Hold the crimping tool horizontally and insert the contact pin with its slit faced downward into the crimp hole on the crimping tool.

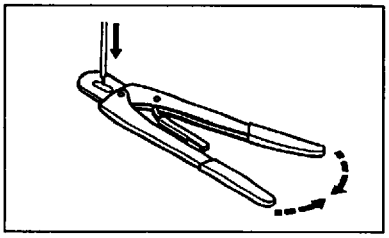

3. Insert the wire onto the contact pin and squeeze the handle until the ratchet releases. Note that the wire should be inserted deep enough until its end comes in contact with the stopper plate of the crimping tool. After crimping, pull the wire to make sure that it is securely fixed.

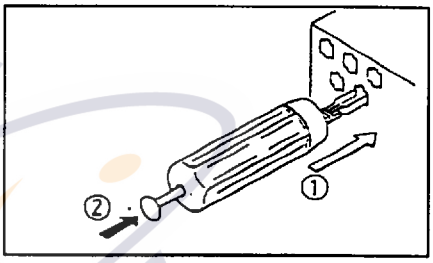

4) Inserting Contact Pin into Connector Housing

The contact pins fitted to wires should be inserted into the connector housing referring to the interconnection diagram.

5) Procedure to Extract Contact Pin

When a contact pin is inserted into an incorrect hole on the connector body, take it out by using the pin extractor.

1. Push the pin extractor into the pin hole from the side opposite to the pin inserting side.

2. Push in the head of the pin extractor, and the contact pin is unlocked and pushed out.

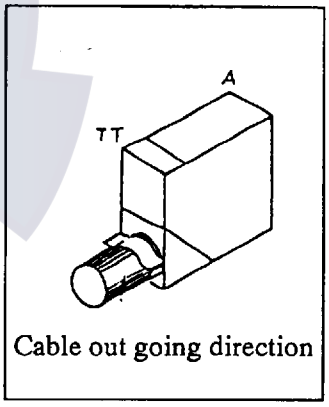

6) Assembling Connector Housing

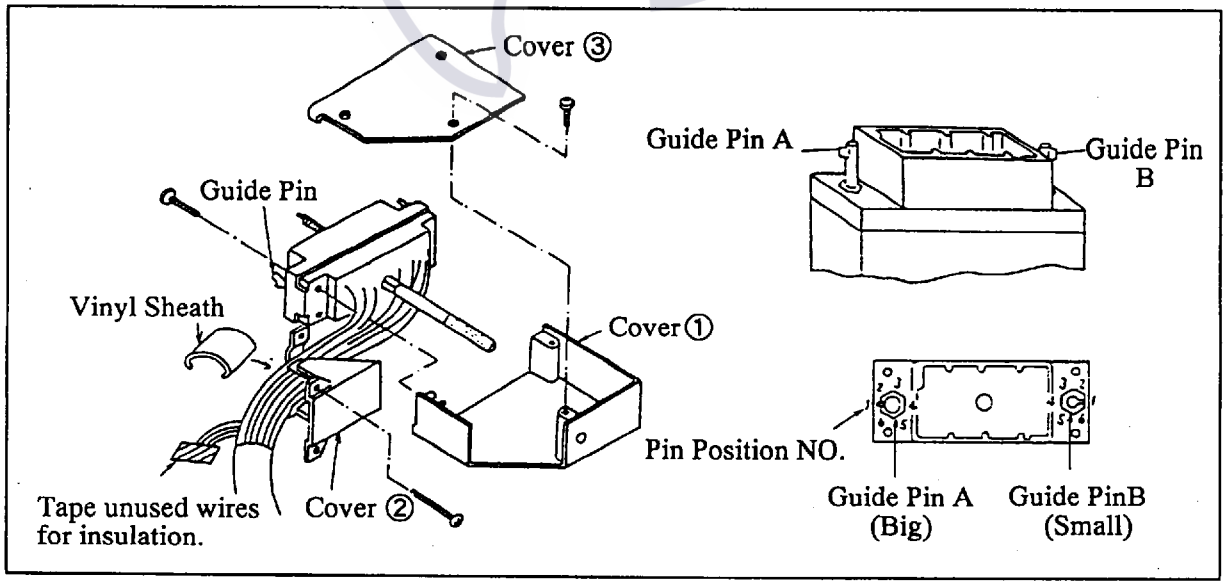

www.reelschematic.com

1. Fix the cover①, paying attention to the cable outgoing direction.

2. Dress the wires and put covers ② and ③ on.

3. Use a fragment of cable sheath to fix the wires with the connector clamp.

4. Cut the unused wires to proper length and wrap their ends with vinyl tape.

Note: Covers①,② and ③ are not fitted on the connectors connected to the main and sub display units.

7) Clamping Cable

Clamp the shield and armor of the cable with cable clamp.

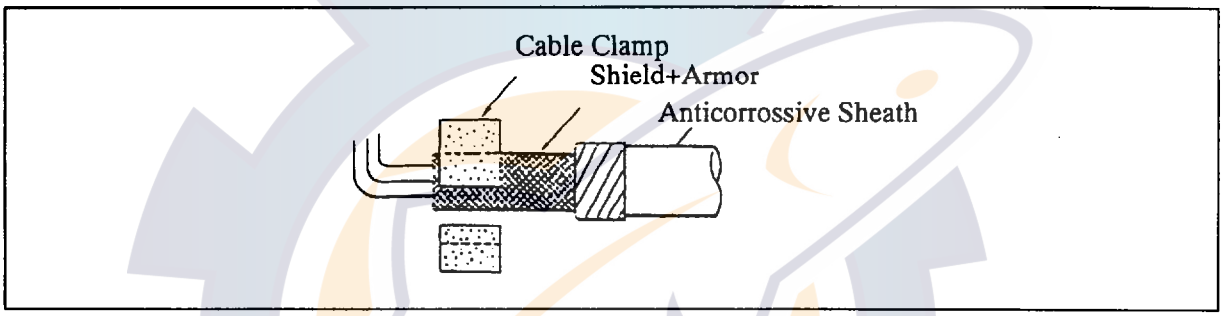

3.3.4. CIF/NMEA Data Signal Cable (CO-SPEVV-SB-C 0.2X5P)

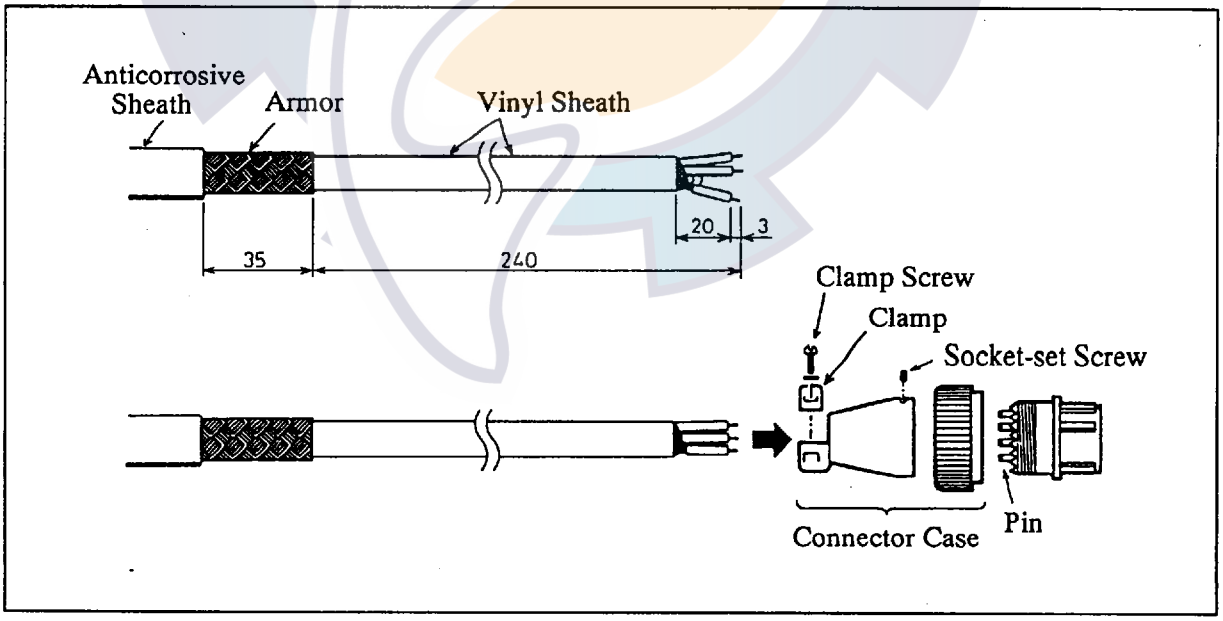

www.reelschematic.com

3.3.5. Other Cables

All other cables are connected to terminal boards. Fabricate their ends as follows.

1) Cable Armor

- For cables led in through cable clamp
  Expose the armor and clamp it with the cable clamp.

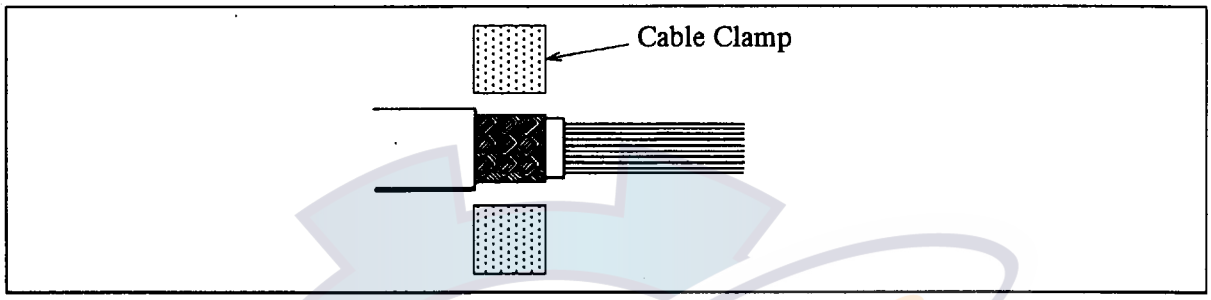

- For cables led in through cable gland
  Solder a vinyl sheath wire to the armor and connect it to the grounding terminal.

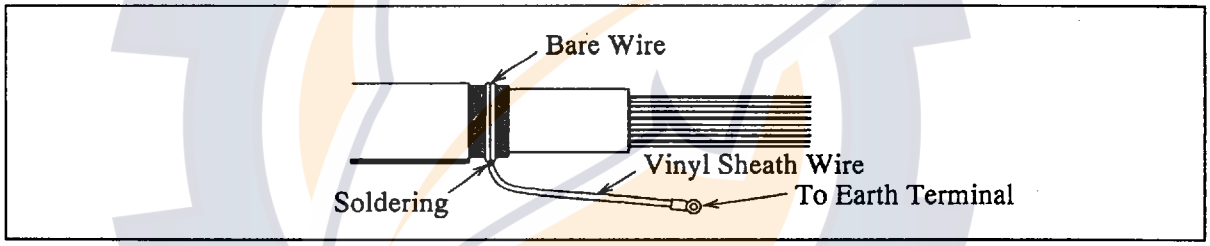

2) Cable Shield

- For individual shield
  Undo individual shields only near at the terminal boards to which the wires are connected. Further, tape shields for insulation.

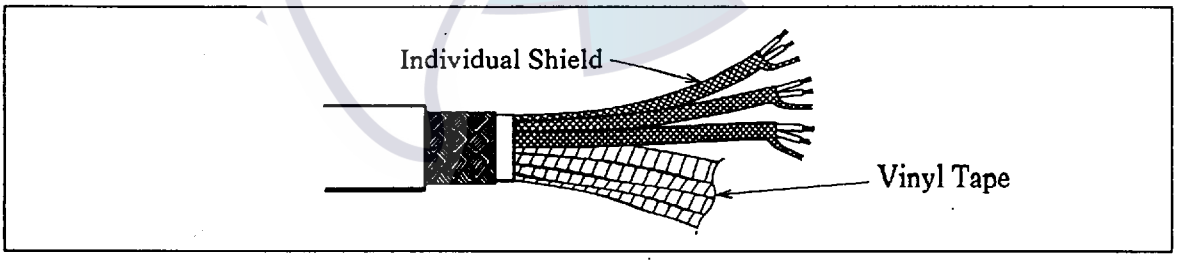

- For common shield
  Undo common shield at entrance of the unit and tape it for insulation.

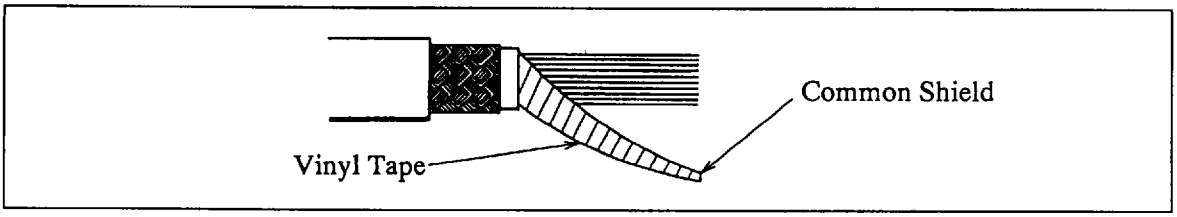

www.reelschematic.com

3.4 Remarks on Connection of Other Equipment

3.4.1. KP Input Signal for Interference Rejection

When a TX trigger pulse (Keying Pulse) is connected from other acoustic equipment which gives interfence to DS-30, note the following.

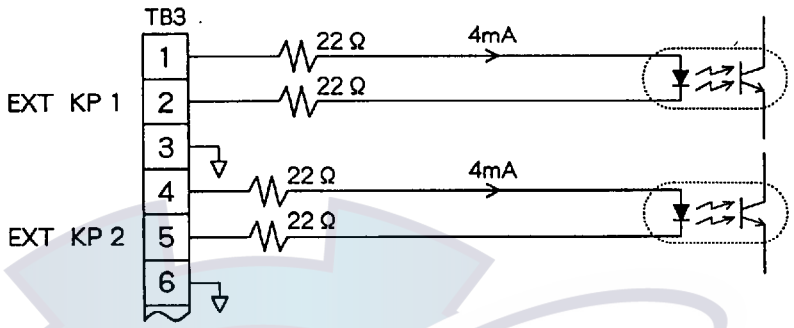

1) Interference Rejection Signal Input Circuit

Two input ports are provided in the processor unit for connection of KP for interference rejection. Use any one of them.

2) Current Requirement

Recommended current is 4 mA while the circuit operates normally at 2 mA to 20 mA. Adjust output resistance for the recommended current.

www.reelschematic.com

3.4.2. NMEA/CIF Signal I/O Circuit

The I/O circuit for NMEA or CIF format data has the configuration shown below, where CIF is Furuno standard data format.

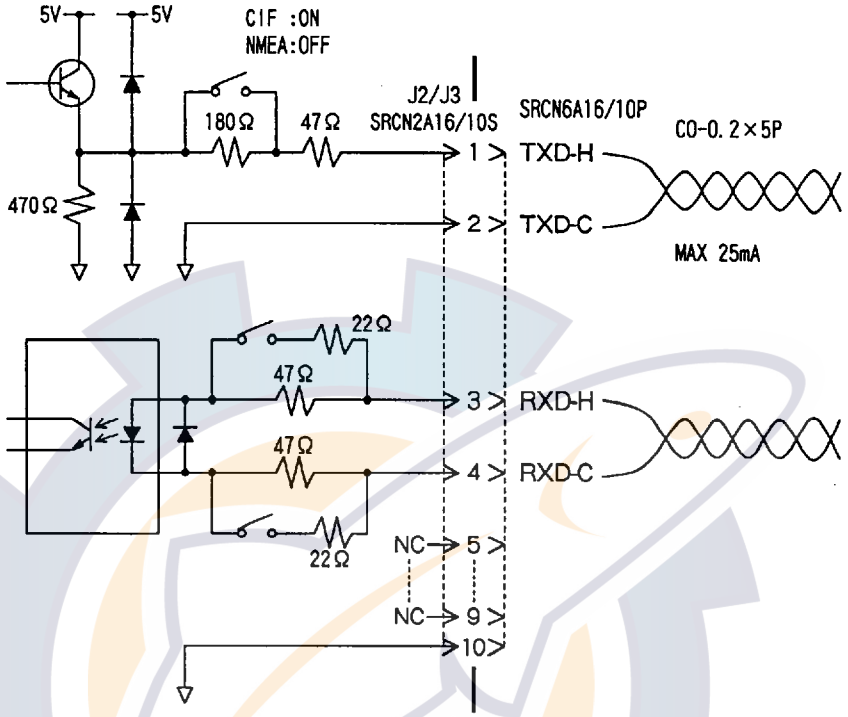

Maximum allowable current in NMEA output line is 25 mA and recommended current is 10 mA. When terminating the line by a photo-coupler for a current loop configuration, take suitable means at the signal receiving side to limit the current. If, for example, forward voltage drop in the photo-coupler is 2.2V:

$$[4.8 - 2.2\ (V)]/[10\ (mA)] - 227\ (\Omega) = 33\ (\Omega)$$

therefore, 33 ohm resistor should be inserted in series in the line.

3.4.3. Requirement of Wind Direction and Speed Signal

The wind meter that outputs following dc voltages can be connected.

Wind direction: 0 to 1Vdc for direction of 0° to 540°
Wind speed: 0 to 1Vdc for speed of 0 to 60 m/sec

3.4.4. Requirement in Engine Revolution Speed Signal

The engine tachometer that outputs following dc voltage can be connected.

0 to 1Vdc for revolution speed of 0 to full scale

www.reelschematic.com

3.4.5. Connection of Gyrocompass Signal (RS-232C/RS-422)

1) Specification of Gyrocompass Signal

DS-30 permits to connect the gyrocompass signal to AUX 1 port (J4) in the processor unit only when the digital gyro data conforms to the specifications shown below. In other cases, connect it to the port alloacted exclusively to gyrocompass via the Furuno A/D Converter AD-100.

Communication Method: RS-232C/RS-422
Data Transmission: Serial asynchronous form
Baud Rate: 600/1200/2400/4800/9600 bauds
Data Interval: 1 ms to 25 ms
Data Format: Type (1), (2) or (3)

Type (1)

Start bit: 1 bit
Data bit: 8 bits
Stop bit: 1 bit
Parity bit: None

No.	Data	Description
1	<CR>	Header
2	n	x100°
3	n	x10°
4	n	x1°
5	n	x0.1°
6	n	x0.01°

Type (2)

Start bit: 1 bit
Data bit: 7 bits
Stop bit: 2 bits
Parity bit: None

No.	Data	Description
1	n	x100°
2	n	x10°
3	n	x1°
4	n	x1/6°
5	n	Do not care.
6	LF	Line feed

Type (3)

Start bit: 1 bit
Data bit: 8 bits
Stop bit: 2 bits
Parity bit: None

No.	Data	Description	No.	Data	Description
1	<$>		12	<,>	
2	<H>		13	SP/-	Polarity; Plus: space, Minus: -
3	<E>		14	n	x1°/sec
4	<H>		15	n	0.1°/sec Rate of turn
5	<R>	Do not care.	16	n	0.01°/sec
6	<C>	Line feed	17	<*>	Check sum delimitor
7	n	x100°	18	α	Checksum
8	n	x10°	19	β	Checksum
9	n	x1°	20	<CR>	Carriage return
10	n	x0.1°	21	<LF>	Line feed, Terminator
11	n	x0.01°			

NOTE: 1. Data should be in 7 bit ASCII code.
2. "n" shows a figure between 0 and 9.
3. The checksum is the 8 bit exclusive OR of all characters in the sentence but not including the "$" and the "" demiliters. The hexadecimal value of the most*

www.reelschematic.com

significant and least significant 4 bits of the result are converted to two ASCII characters, which are transmitted as No. 18 and 19 data.

2) DIP Switch Setting

Set DIP switches on the MIF board in the processor unit as shown in the table.

<table>
<tr><th colspan="2">DIP Switch</th><th>Function</th><th>Setting</th></tr>
<tr><td rowspan="2">S2</td><td>1
2</td><td>AUX 1 Port Baud Rate</td><td>Set baud rate of gyro signal.
<table>
<tr><th>Baud Rate</th><th>1</th><th>2</th></tr>
<tr><td>9600</td><td>OFF</td><td>OFF</td></tr>
<tr><td>4800</td><td>OFF</td><td>ON</td></tr>
<tr><td>2400</td><td>ON</td><td>OFF</td></tr>
<tr><td>1200</td><td>ON</td><td>ON</td></tr>
</table></td></tr>
<tr><td>3
4</td><td>AUX 1 Port Input Format</td><td>Set data format of gyro signal.
<table>
<tr><th>Data Format</th><th>3</th><th>4</th></tr>
<tr><td>Type (1)</td><td>OFF</td><td>OFF</td></tr>
<tr><td>Type (2)</td><td>OFF</td><td>ON</td></tr>
<tr><td>Type (3)</td><td>ON</td><td>-</td></tr>
</table></td></tr>
<tr><td>S3</td><td>1
2</td><td>Input Port Selection</td><td>Select input port of gyro signal. Select AUX1.
<table>
<tr><th>Input Port</th><th>1</th><th>2</th></tr>
<tr><td>AD-100</td><td>OFF</td><td>OFF</td></tr>
<tr><td>AUX1</td><td>OFF</td><td>ON</td></tr>
<tr><td>CIF/NMEA</td><td>ON</td><td>ON</td></tr>
</table></td></tr>
</table>

www.reelschematic.com

CHAPTER 4. POST-INSTALLATION SETTING

4.1. DIP Switch Setting

Check and if necessary change the DIP switch settings depending on the external equipment connected.

4.1.1. Display Unit

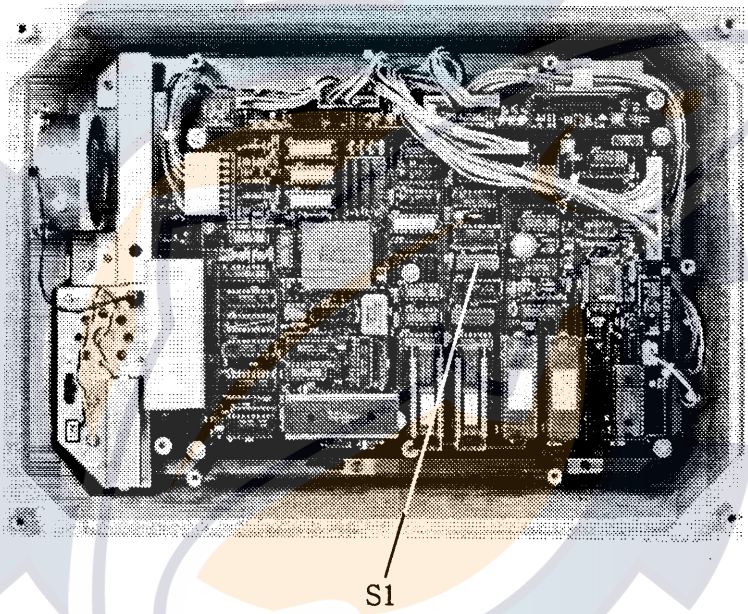

Board	DIP SW		Function	Setting
LCP Board 66P3300	S1	1	Main/Sub Selection	OFF: Main Display DS-300 ON: Sub Display DS-300A
		2 3 4	Language Selection	Language / 2 / 3 / 4 Japanese / OFF / OFF / OFF English / ON / ON / ON
		5	Indication of current direction	OFF: Coming direction ON: Going direction
		6	Time indication	OFF: Legacy indication ON: UTC indication when input GPS Signal

www.reelschematic.com

4.1.2. Processor Unit

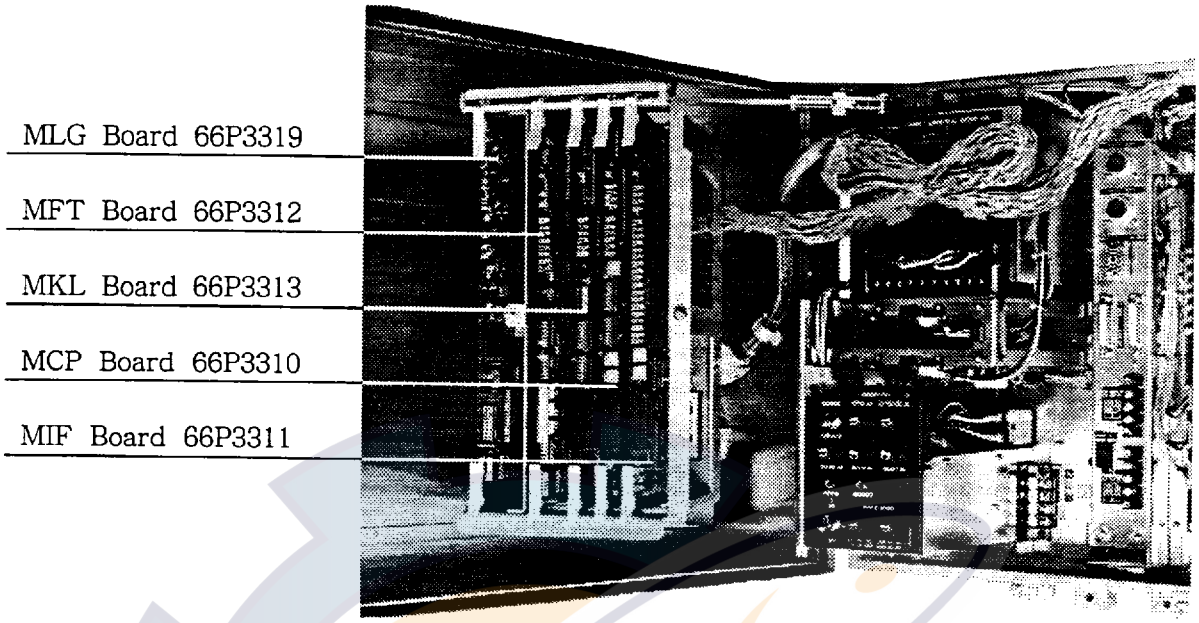

Board	DIP SW		Function	Setting
MKL Board 66P3313	S1	1 2	Filter Parameter Setting	This determines the response speed of ship's speed reading against change of actual ship's speed. Normally it is set as shown in the table. Change the setting when the response seems slow. Ship Size / 1 / 2 Large (300m or more) / OFF / OFF Medium (200m or more) / OFF / ON Small (100m or less) / ON / OFF
MCP Board 66P3310	S3	7	Interference Rejector 1	Set to ON when KP signal from other acoustic equipment is connected to TB3-#1/#2 in processor unit for interference rejection. OFF: Interference rejector 1 on (Factory setting) ON: Interference rejector off
		8	Interference Rejector 2	Set to ON when KP signal from other acoustic equipment is connected to TB3-#4/#5 in processor unit for interference rejection. OFF: Interference rejector 2 on (Factory setting) ON: Interference rejector off
MIF Board 66P3311	S5	0 to F	Engine Revolution Speed Full Scale Setting	Set this item when the engine tachometer is connected. S5 is a DIP switch. Set it so that the full scale revolution (revolution for ±10V output) satisfies the following equation: Full scale revl. (rpm) = (S5 setting)x10 + 50 For example, if the full scale revolution is 70 rpm, set "2" and if 200 rpm, set "F".

www.reelschematic.com

4.1.3. Distribution Unit

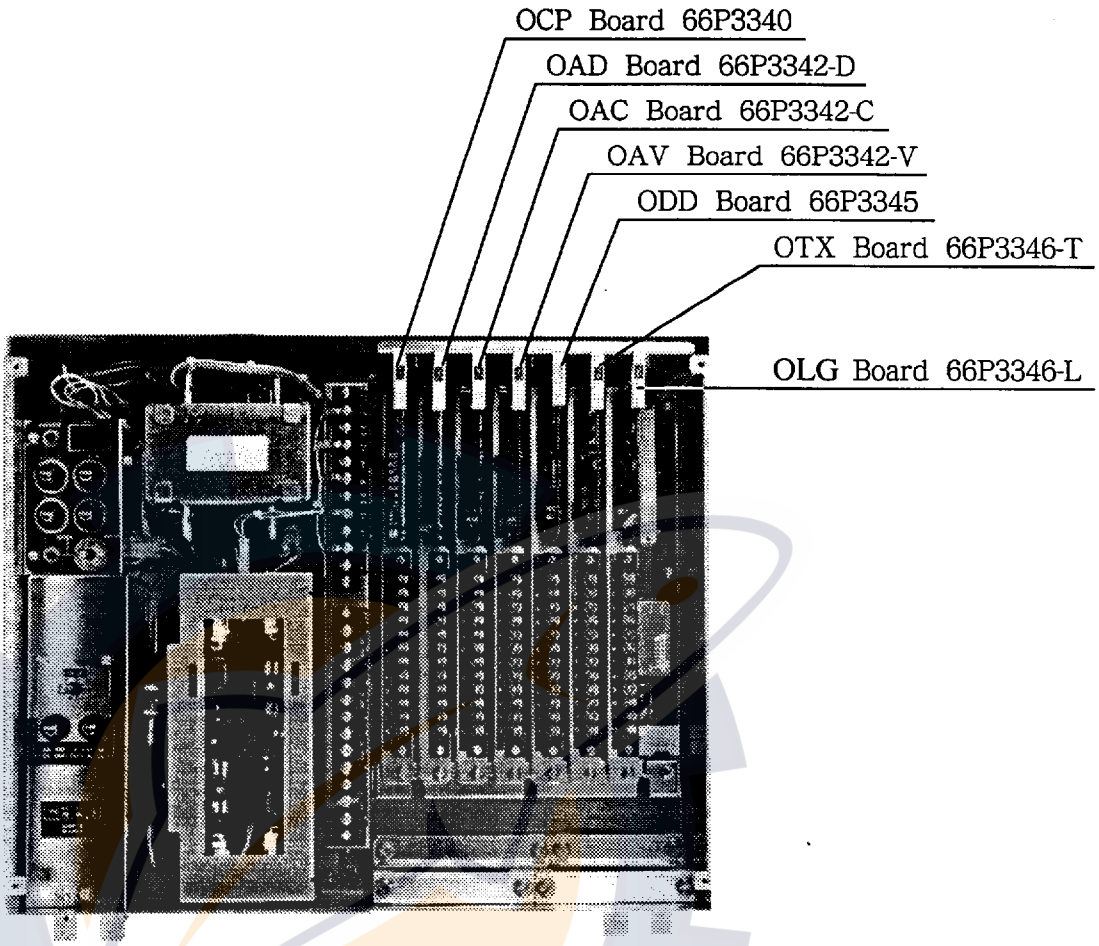

Quantity and type of boards to be incorprated change with equipment specifications.

<table>
<tr><th>Board</th><th colspan="2">DIP SW</th><th>Function</th><th>Setting</th></tr>
<tr><td rowspan="2">OAV Board 66P3342 -V</td><td rowspan="2">S1</td><td>1
2</td><td>Ship's Speed Voltage Output Selection</td><td>Select ship's speed versus voltage output characteristics according to specifications of external equipment connected to OAV board.
<table>
<tr><th>Output</th><th>1</th><th>2</th></tr>
<tr><td>-10 to +40 kt = -2.50 to +10.0V</td><td>OFF</td><td>OFF</td></tr>
<tr><td>-10 to +30 kt = -3.33 to +10.0V</td><td>ON</td><td>OFF</td></tr>
<tr><td>-10 to +25 kt = -4.00 to +10.0V</td><td>OFF</td><td>ON</td></tr>
<tr><td>-10 to +20 kt = -5.00 to +10.0V</td><td>ON</td><td>ON</td></tr>
</table></td></tr>
<tr><td>3
4</td><td>Ship's Speed Output Selection</td><td>Select type of ship's speed which is output from OAV board.
<table>
<tr><th>Output</th><th>3</th><th>4</th></tr>
<tr><td>Fore-aft speed</td><td>OFF</td><td>OFF</td></tr>
<tr><td>Fore-aft speed in absolute value</td><td>ON</td><td>OFF</td></tr>
<tr><td>Vector speed</td><td>OFF</td><td>ON</td></tr>
</table></td></tr>
</table>

www.reelschematic.com

<table>
<tr><th>Board</th><th colspan="2">DIP SW</th><th>Function</th><th>Setting</th></tr>
<tr><td rowspan="2">OAC Board 66P3342 -C</td><td rowspan="2">S1</td><td>1
2</td><td>Ship's Speed Current Output Selection</td><td>Select ship's speed versus current output characteristics according to specifications of external equipment connected to OAC board.
<table>
<tr><th>Output</th><th>1</th><th>2</th></tr>
<tr><td>-10 to +40 kt = 4.0 to 20.0 mA
0 kt = 7.2 mA</td><td>OFF</td><td>OFF</td></tr>
<tr><td>-10 to +30 kt = 4.0 to 20.0 mA
0 kt = 8.0 mA</td><td>ON</td><td>OFF</td></tr>
<tr><td>-10 to +25 kt = 4.0 to 20.0 mA
0 kt = 8.57 mA</td><td>OFF</td><td>ON</td></tr>
<tr><td>-10 to +20 kt = 4.0 to 20.0 mA
0 kt = 9.33 mA</td><td>ON</td><td>ON</td></tr>
</table></td></tr>
<tr><td>3
4</td><td>Ship's Speed Output Selection</td><td>Select type of ship's speed which is output from OAC board.
<table>
<tr><th>Output</th><th>3</th><th>4</th></tr>
<tr><td>Fore-aft speed</td><td>OFF</td><td>OFF</td></tr>
<tr><td>Fore-aft speed in absolute value</td><td>ON</td><td>OFF</td></tr>
<tr><td>Vector speed</td><td>OFF</td><td>ON</td></tr>
</table></td></tr>
<tr><td>OAD Board 66P3342 -D</td><td>S1</td><td>1</td><td>Analog Indicator</td><td>Select analog indicator connected to OAD board.
<table>
<tr><th>Analog Indicator</th><th>1</th></tr>
<tr><td>MF-22A, DS-761/762/763/771/772/773</td><td>ON</td></tr>
<tr><td>DS-381/382</td><td>OFF</td></tr>
</table>
Note: Ship' speed current output to analog indicator is as follows:
OFF: -10 to +40 kt = -2.50 to +10.0 mA
ON: -10 to +30 kt = -3.33 to +10.0 mA</td></tr>
<tr><td>ODD Board 66P3345</td><td>S1</td><td>1
2</td><td>Digital Indicator</td><td>Set as follows for the digital indicator connected to ODD board.
<table>
<tr><th>Digital Indicator</th><th>1</th><th>2</th></tr>
<tr><td>MF-11D</td><td>OFF</td><td>OFF</td></tr>
<tr><td>MF-22D</td><td>ON</td><td>OFF</td></tr>
<tr><td>DS-720</td><td>OFF</td><td>ON</td></tr>
<tr><td>CI-370/377</td><td>ON</td><td>ON</td></tr>
</table></td></tr>
</table>

4.1.4. Digital Indicator DS-351 (option)

Refer to AP-7.

www.reelschematic.com

4.2. Setting Offset Data Menu

The offset data menu contains items for calibrating the DS-30 after it is installed on a ship. Unlock the menu and enter appropriate data.

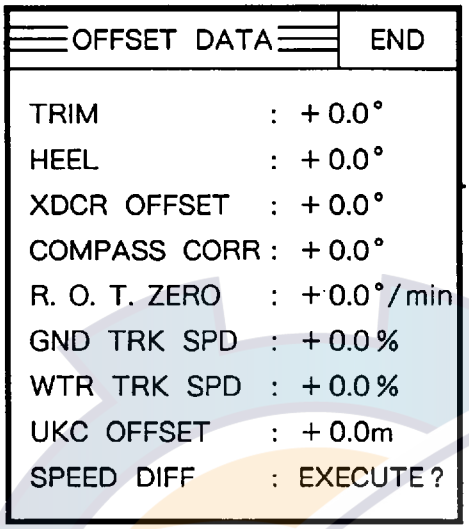

Factory setting in bold

Item	Description	Selection
Trim	Set ship's trim, that is, the relationship of the draft at bow and stern. Use " + " when the ship is down by the stern and "-" when it is down by the bow.	- 12.5 to + 12.5° **0.0°**
Heel	Set ship's heel, that is, lateral inclination. Use " + " when the ship is up by the port and "-" when it is up by the starboard.	-12.5 to + 125° **0.0°**
XDCR Offset	Set deviation angle of the transducer's fore-aft axis with reference to the ship's longitudinal axis. Use " + " when it is deviated to starboard side.	-12.5 to + 12.5° **0.0°**
Compass Correction	Set a correction value to be applied to the heading sensor input to eliminate any constant deviation. Use " + " to add the correction value to the readout and "-" to subtract it from the readout. *NOTE: When the gyrocompass incorporates error correction function, do the correction at gyrocompass.*	-12.5 to + 12.5° **0.0°**
R.O.T. (Rate Of Turn) Zero	Set a correction value if required for zero adjustment of the rate-of-turn gyro readout. Use " + " to add the correction value to the readout and "-" to subtract it. When the ship is at a perfect standstill and DS-30 has L/L data fed from nav-sensor, set a correction value which makes reading of ship's transverse speed zero. If DS-30 has no L/L data, the readout can not be corrected since the speed reading contains the latitude error (see page 2-7).	-12.5 to + 12.5°/min **0.0°/min**

www.reelschematic.com

Item	Description	Selection
Ground Track Speed (GND TRK SPD)	Set a correction factor to be applied to the over-the-ground speed measured by DS-30. Use "+" to increase the readout and "-" to decrease it. Normally it is not necessary to set this item.	-12.5 to +12.5% **0.0%**
Water Track Speed (WTR TRK SPD)	Set a correction factor to be applied to the through-the-water speed measured by DS-30. Use "+" to increase the readout and "-" to decrease it. Normally it is not necessary to set this item.I	-12.5 to +12.5% 0.0%
UKC Offset	Set a correction value to be applied to the under-keel clearance (UKC) measured by DS-30. Use "+" to add the correction value to the readout and "-" to subtract it. A "-" correction value is usually used when the transducer is installed off the keel as shown below. A "+" correction value is used to measure water depth instead of the under-keel-clearance. In this case, ship's draft is applied as the correction value. In addition to above, if there is a difference between the under-keel clearances measured by DS-30 and echo sounder and you are sure that the value measured by echo sounder is accurate, the difference can be used as a correction value.	-50.0 to +50.0m 0.0m
Speed Difference	Display the difference between the over-the-ground speed and heading measured by DS-30 and those derived from the external nav-sensor. The difference is displayed in parenthesis to the right of the correction values for the compass and the ground tracking speed. *It takes a few minutes until the difference is displayed.*	EXECUTE

www.reelschematic.com

4.3. Setting System Menu

The system menu contains display unit preset menu, ship data menu and external sensor menu.

4.3.1. Opening System Menu

Turn on the unit while holding down the MENU key until a beep sound stops.

4.3.2. Closing System Menu

Turn off and then on the POWER switch.

4.3.3. Setting Display Unit Preset Menu

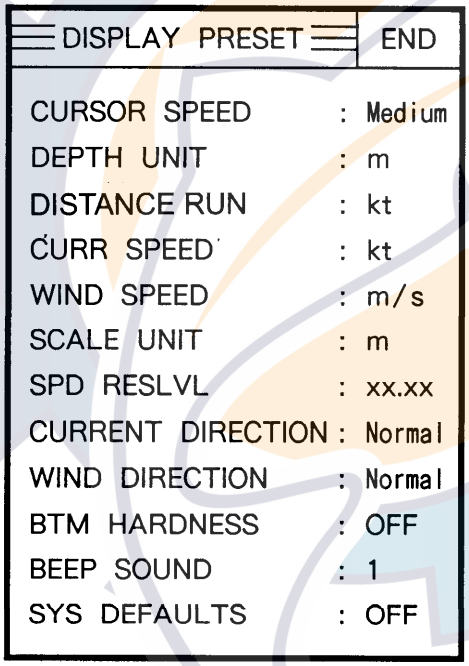

Item	Description	Selection
Cursor Speed	Choose the speed at which the cursor is moved by the trackball.	1. Slow 2. Medium 3. Fast
Depth Unit	Choose the unit of depth for the under-keel clearance display.	1. m 2. ft 3. fa
Distance Run	Choose the unit for the distance run readout.	1. n.m. 2. km

www.reelschematic.com

Curr. Speed	Choose the unit for the current speed readout.	1. kt 2. m/s
Wind Speed	Choose the unit for the wind speed readout.	1. kt 2. m/s
Scale Unit	Choose the disance scale unit for the X-axis of the berthing mode and under-keel clearance graphic display.	1. m 2. nm
Speed Resolution Level	Choose the resolution level for the ship's speed readout.	1. xx.xx 2. xx.x or xx.xx
Current Direction	Choose "Normal" so that the water current direction readout shows the direction toward which water moves.	1. Normal 2. Opposite
Wind Direction	Choose "Normal" so that the wind direction readout shows the direction from which the wind blows.	1. Normal 2. Opposite
Bottom Hardness	Choose whether to display bottom hardness level on the under-keel clearance graphic display.	1. Yes 2. No
Beep Sound	Choose tone/pattern of the audible alarm	1. Yes 2. No
System Default	Use this function to restore factory settings on all the system menus, erasing present settings.	

www.reelschematic.com

4.3.4. Setting Ship Data Menu

Set the ship's data measured on the ship drawing with either the bow or stern as a reference point of measurement..

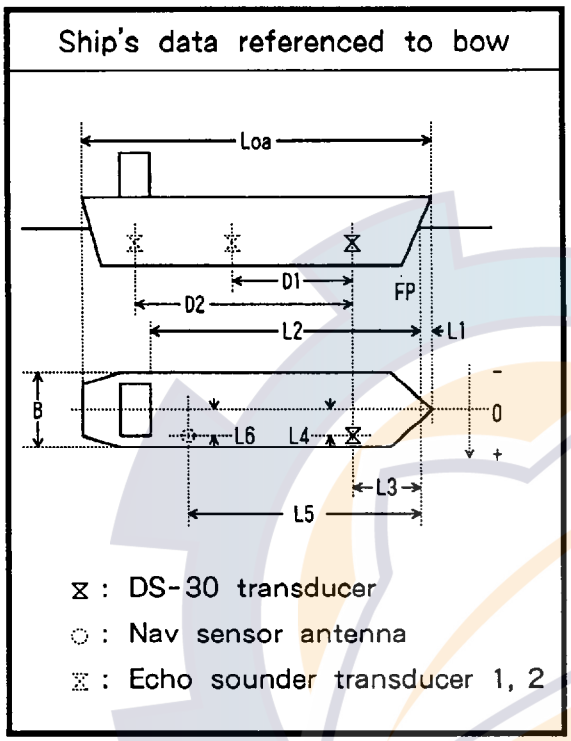

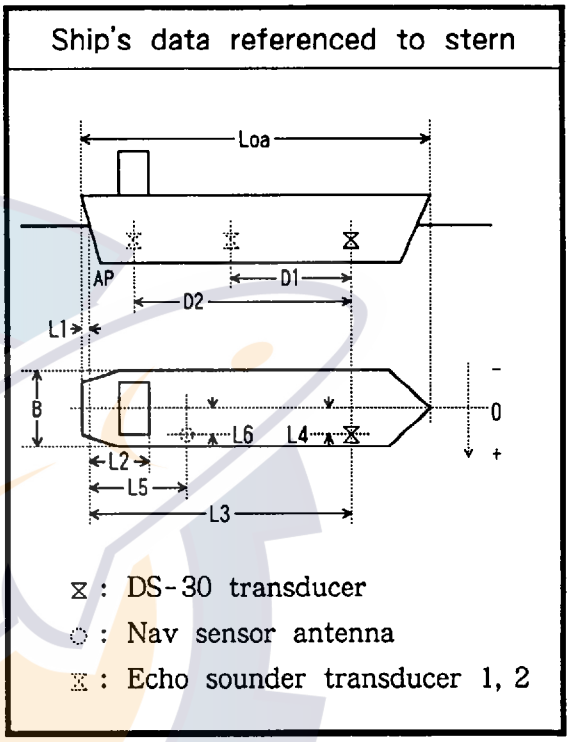

Item	Description	Selection
Reference Point	Specify a reference point for measurement of the ship's data.	1. Bow 2. Stern
Loa	Set ship's length overall	50.0 to 400 m
B	Set ship's breadth.	5.0 to 100.0 m
L1	Set horizontal distance between bow (stern) and full load water line	0.0 to 30.0 m
L2	Set horzontal distance between full load water line and main radar antenna.	0.0 to (Loa - L1) m
L3	Set horizontal distance between full load water line and DS-30 transducer.	0.0 to (Loa - L1) m
L4	Set horizontal distance between keel and DS-30 transducer.	-B/2 to B/2 m
L5	Set horizontal distance between full load water line and nav-equipment antenna.	0.0 to (Loa - L1) m

www.reelschematic.com

L6	Set horizontal distance between keel and nav-equipment antenna.	-B/2 to B/2 m
D1	Set distance between DS-30 and #1 echo sounder transducers.	0.0 to (Loa - L1) m
D2	Set distance between DS-30 and #2 echo sounder transducers.	0.0 to (Loa - L1) m

4.3.5. Setting External Sensor Menu

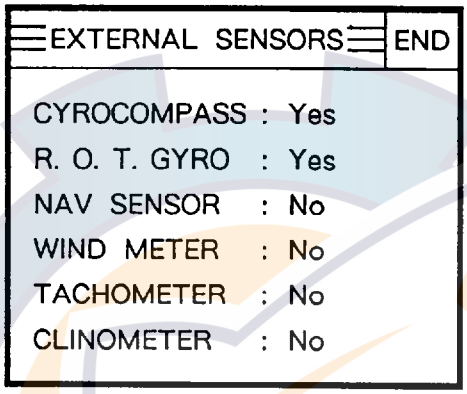

Item	Description	Selection
GYROCOMPASS	Choose YES if a gyrocompass is connected.	Yes/No
R.O.T. GYRO	Choose YES if the laser rate of turn gyro is connected.	Yes/No
NAV SENSOR	Choose YES if a nav-sensor is connected.	Yes/No
WIND METER	Choose YES if a wind meter is connected.	Yes/No
TACHOMETER	Choose YES if a main engine tachometer is connected.	Yes/No
CLINOMETER	Choose YES if a tachometer is connected.	Yes/No

www.reelschematic.com

CHAPTER 5.
POST-INSTALLATION CHECK

5.1. LED Status Check

5.1.1. Location of LEDs

The LEDs are located on the printed circuit boards shown in the table.

Unit	Board	LED
Processor Unit DS-310	MCP Board 66P3310	CR1 to CR11
	MFT Board 66P3312	CR1 to CR9
	MKL Board 66P3313	CR1 to CR7
	MIF Board 66P3311	CR3 to CR60
	MLG Board 66P3319	CR3 to CR5
Transceiver Unit DS-320	NCP Board 66P3330	CR10 to CR25
	NTX Board 66P3331	CR1 to CR20
	NPR Board 66P3333	CR1 to CR3
Rate-of Turn Gyro DS-430	RIF Board 66P3355	CR1, CR2
	Sensor	Above output connector
Digital Indicator DS-350/351	PCP Board 66P3355	CR1 to CR4
Distribution Box DS-370	OCP Board 66P3340	CR6 to CR12
	OAV Board 66P3342-V	CR2
	OAC Board 66P3342-C	CR2
	ODD Board 66P3345	CR1, CR2

○ : Lit
◑ : Blinking
● : Not lit (OFF)

www.reelschematic.com

5.1.2. Processor Unit

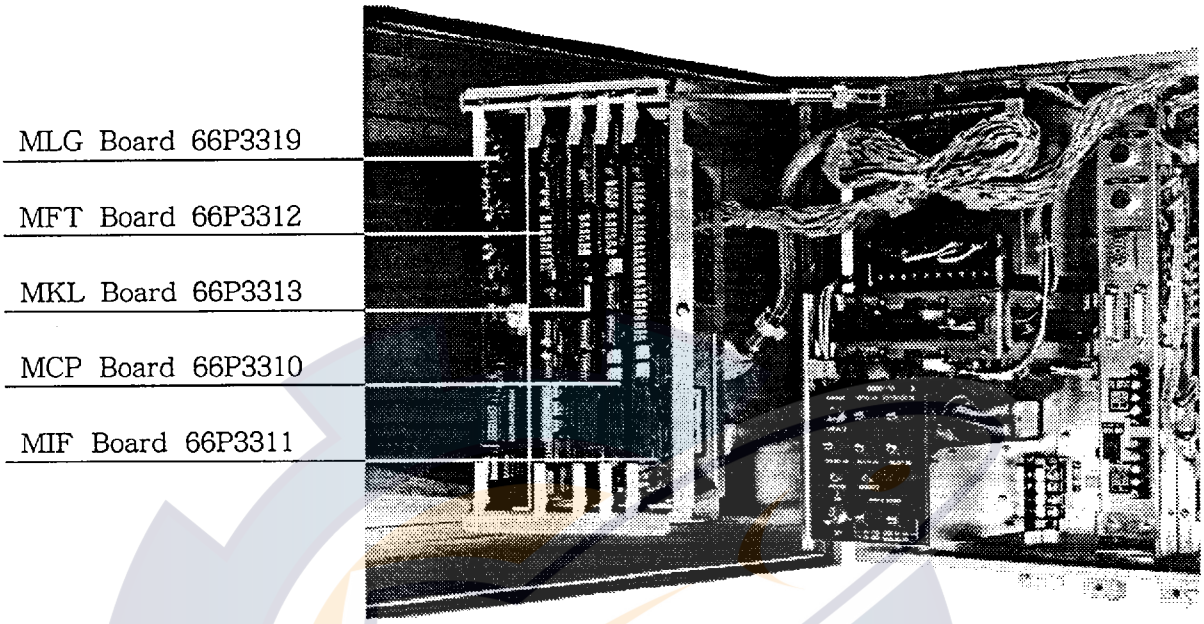

66P3319	66P3312	66P3313	66P3310	66P3311
CR3 +5V	CR1 PASS	CR1 PASS	CR1 PASS	CR3 PASS
CR4 +12V			CR2 EXKP	
CR5 -12V			CR3 KP	CR5 EST
			CR4 EST	CR6 EDA
	CR2 RUN	CR2 KLT	CR5 EG	CR7 ECK
	CR3 TASK1	CR3 KLR		CR8 LOG
	CR4 TASK2	CR4 TTK	CR6 DSPT	
	CR5 TASK3	CR5 TRK	CR7 DSPR	CR10 CYRD
	CR6 TASK4	CR6 ATK	CR8 TXT	CR11 CYRC
	CR7 TASK5	CR7 ATR	CR9 TXR	CR12 RELD
	CR8 TASK6		CR10 AXT	CR13 RELC
	CR9 TASK7		CR11 AXR	CR14 CN1T
				CR15 CN1H
				CR16 CN2T
				CR17 CN2R
				CR18 RAT
				CR19 RAR
				CR22 AXIT
				CR23 AXIR
				CR24 AX2T
				CR25 AX2R
				CR26 MOT
				CR27 MOR
				CR46 N/C1
				CR47 N/C2
				CR28 LOGI
				CR29 TEST
				CR59 EKP1
				CR60 EKP2

www.reelschematic.com

1) MLG Board 66P3319

LED			Status	Remarks
No.	Signal	Color		
CR3	+5V	GRN	○	
CR4	+12V	GRN	○	
CR5	-12V	GRN	○	

2) MFT Board 66P3312

LED			Status	Remarks
No.	Signal	Color		
CR1	PASS	GRN	○	Check hardware on MFT board.
CR2	RUN	YEL	◑	CPU processing
CR3	TASK1	YEL	◑	Ditto
CR4	TASK2	YEL	◑	Ditto
CR5	TASK3	YEL	◑	Ditto
CR6	TASK4	YEL	◑	Ditto
CR7	TASK5	YEL	◑	Ditto
CR8	TASK6	YEL	◑	Ditto
CR9	TASK7	YEL	○	Carrier level

3) MKL Board 66P3313

LED			Status	Remarks
No.	Signal	Color		
CR1	PASS	GRN	○	Lights when self check of this board is OK.
CR2	KLT	YEL	◑	Internal data (MFP SIO out)
CR3	KLR	YEL	●	Internal data (MFP SIO in)
CR4	TTK	YEL	◑	Flickers or turns off depending on internal data or DIP switch setting (AUX1 out)
CR5	TRK	YEL	●	Internal data (AUX1 in)
CR6	ATK	YEL	●	Internal data (AUX2 out)
CR7	ATR	YEL	●	Internal data (AUX2 in)

4) MCP Board 66P3310

LED			Status	Remarks
No.	Signal	Color		
CR1	PASS	GRN	○	Lights when selfcheck of this board is OK.
CR2	EXKP	YEL	◑	Blinks with external KP input. Keeps off when external KP is not connected.
CR3	KP	YEL	◑	Blinks whenever DS-30 transmits.
CR4	Est	YEL	●	Unused
CR5	EG	YEL	◑	Echo reception gate
CR6	DSPT	YEL	◑	Serial data output to display unit DS-300

www.reelschematic.com

CR7	DSPR	YEL	◑	Control data input from display unit DS-300
CR8	TXT	YEL	◑	Control data output to transceiver unit DS-320
CR9	TXR	YEL	◑	Serial data input from transceiver unit DS-320
CR10	AXT	YEL	●	Unused (auxiliary output port for data communication)
CR11	AXR	YEL	●	Unused (auxiliary input port for data communication)

5) MIF Board 66P3311

LED			Status	Remarks
No.	Signal	Color		
CR3	PASS	GRN	○	Lights when self check of this board is OK.
CR5	EST	YEL	◑	Echo start pulse to display unit DS-300
CR6	EDA	YEL	◑	Echo data pulse to display unit DS-300
CR7	ECK	YEL	◑	Echo display shift pulse to display unit DS-300
CR8	LOG	YEL	◑	Log pulse 200 pulses/nautical mile Flickering speed changes with ship's speed. Turns off when ship' speed is 0 kt.
CR10	GYRO	YEL	◑	Flickers by serial data input from AD-100 When LSB bit of bearing data is an odd number, it lights.
CR11	GYRC	YEL	◑	Flickers by serial clock input from AD-100.
CR12	RELB	YEL	◑	True bearing data output Serial data pulse (AD-100 data format)
CR13	RELC	YEL	◑	Clock for true bearing data Serial shift pulse (AD-100 format)
CR14	CN1T	YEL	◑	CIF/NMEA port 1 data output
CR15	CN1R	YEL	◑	CIF/NMEA port 1 data input Keeps off when CIF/NMEA data line is not connected to data source.
CR16	CN2T	YEL	◑	CIF/NMEA port 2 data output
CR17	CN2R	YEL	◑	CIF/NMEA port 2 data input Keeps off when CIF/NMEA data line is not connected to data source.
CR18	RAT	YEL	◑	Control data output to rate of turn gyro DS-340 Keeps off when DS-340 is not connected.
CR19	RAR	YEL	◑	Angular speed data input from rate of turn gyro DS-340 Keeps off when DS-340 is not connected.
CR22	AX1T	YEL	◑	Internal data serial output
CR23	AX1R	YEL	◑	External serial bearing data input Turns off when there is no data input (AUX1 in). See note 1.
CR24	AX2T	YEL	◑	Nav reference serial data output (AUX2 out)
CR25	AX2R	YEL	◑	Serial data input from external equipment Turns off when there is no data input (AUX 2 in). See note 2.
CR26	MOT	YEL	●	Unused (MIF D-SUB25P) See note 3.
CR27	MOR	YEL	●	Unused (MIF D-SUB25P) See note 3.
CR28	LOGI	YEL	●	Unused
CR29	TEST	YEL	● ○	MIF board self check indication LED Light: Self check working Off: Normal operation

www.reelschematic.com

CR46	N/C1	YEL	○ ●	CIF/NMEA serial input/output port 1 Light: NMEA selected Off: CIF selected
CR47	N/C2	YEL	○ ●	CIF/NMEA serial input/output port 2 Light: NMEA selected Off: CIF selected
CR59	EKP1	YEL	◑	KP 1 input from external equipment
CR60	EKP2	YEL	◑	KP2 input from external equipment
Note 1	Selection of serial bearing data input format 1: Type 1 2: Type 2 (Tokimekku) 3: Type 3 (Yokokawa Hokushin) Input data format is selected by DIP switch			
Note 2	Selection of serial data input format from external equipment 1: Wind meter I/F (SC-D232S) 2: Yokokawa NAV PET (MD1-1) Input data format is selected by DIP switch.			
Note 3	MIF monitor serial input/output port			

www.reelschematic.com

5.1.3 Transceiver Unit

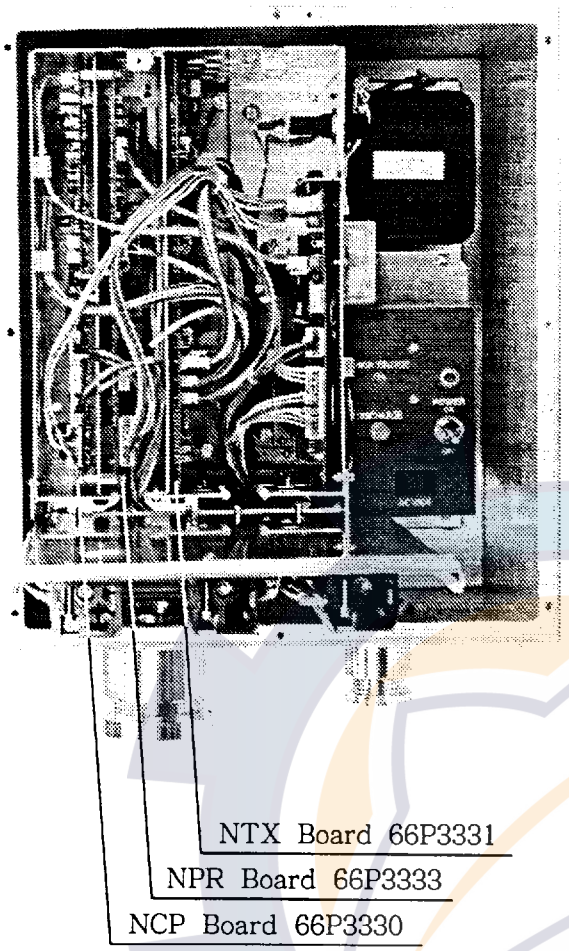

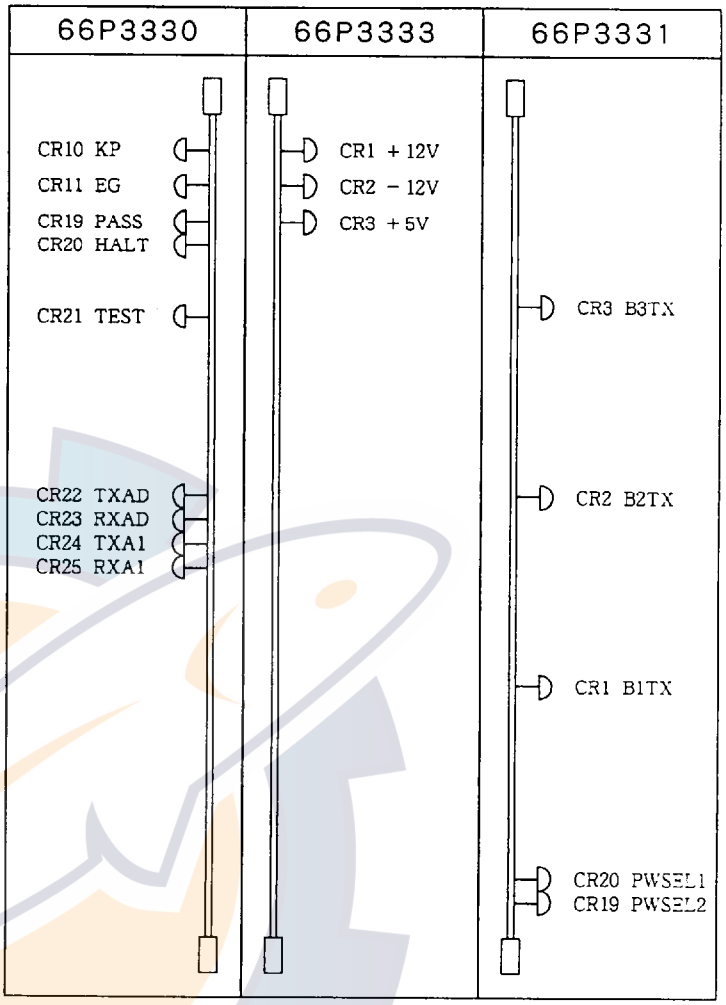

1) NCP Board 66P3330

LED			Status	Remarks
No.	Signal	Color		
CR10	KP	YEL	◑	Transmission pulse input/output monitor Normal transmission mode: input monitor Independent transmission mode 1, 2: output monitor
CR11	EG	YEL	◑	Reception gate input/output monitor Normal transmission mode 1, 2: input monitor Independent transmission mode: output monitor
CR19	PASS	GRN	○	Lights when self check of this board is OK.
CR20	HALT	YEL	◑	CPU monitor
CR21	TEST	YEL	○ ●	NCP board operation mode monitor Normal transmission mode: Off Independent transmission mode 1, 2: Lights
CR22	TXAD	YEL	◑	Serial data output to processor unit DS-310
CR23	RXAD	YEL	◑	Control data input from processor unit DS-310
CR24	TXA1	YEL	● ◑	Auxiliary serial output port Normal transmission mode: Off Independent transmission mode: Flickers
CR25	RXA1	YEL	●	Auxiliary input port

www.reelschematic.com

2) NTX Board 66P3331

LED			Status	Remarks
No.	Signal	Color		
CR1	B1TX	YEL	◑	Beam 1 transmission monitor Blinks whenever DS-30 transmits.
CR2	B2TX	YEL	◑	Beam 2 transmission monitor Blinks whenever DS-30 transmits.
CR3	B3TX	YEL	◑	Beam 3 transmission monitor Blinks whenever DS-30 transmits.
CR19	PWSEL1	YEL	●	Power reduction bit 1 monitor
CR20	PWSEL2	YEL	●	Power reduction bit 2 monitor

3) NPR Board 66P3333

LED			Status	Remarks
No.	Signal	Color		
CR1	+12V	GRN	○	
CR2	-12V	GRN	○	
CR3	+5V	GRN	○	

www.reelschematic.com

5.1.4. Rate-of-Turn Gyro

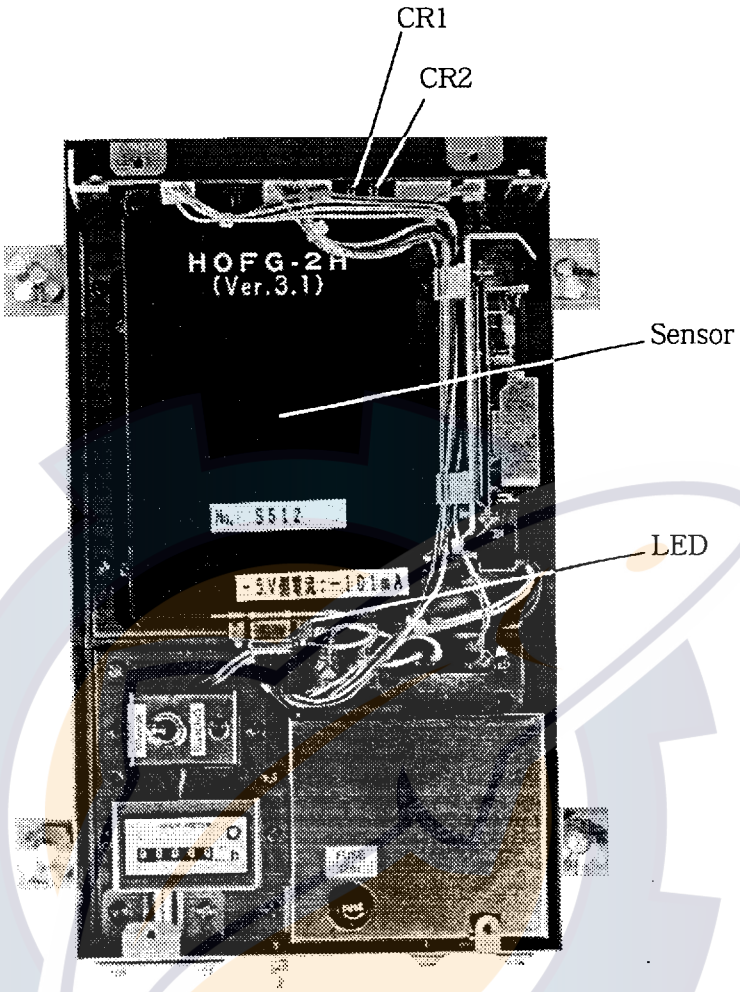

1) RIF Board 66P3350

LED			Status	Remarks
No.	Signal	Color		
CR1	TXD Monitor	YEL	◑	
CR2	RXD Monitor	YEL	◑	

2) Sensor Block

LED			Status	Remarks
No.	Signal	Color		
LED above connector		RED	● ◑	Monitoring internal condition of sensor

www.reelschematic.com

5.1.5. Distribution Box

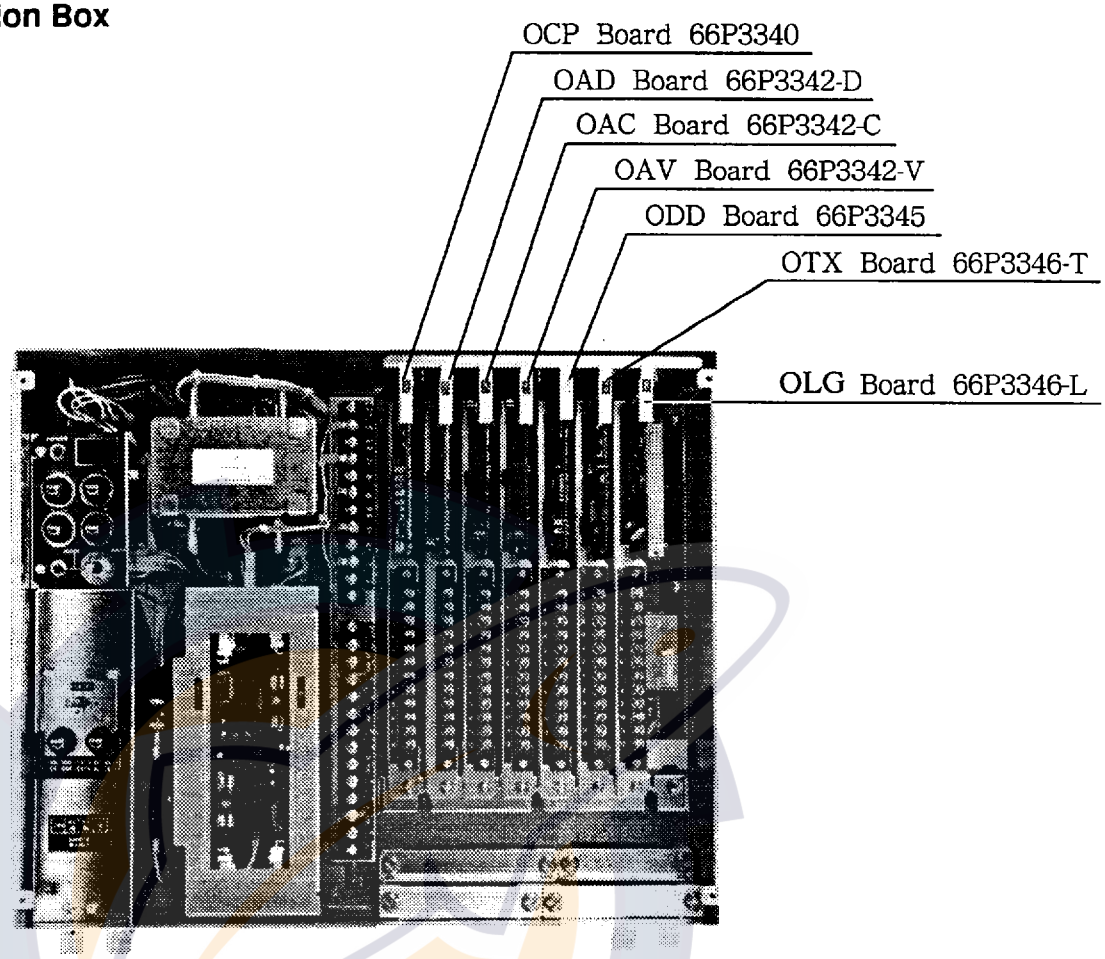

Quantity and type of boards to be incorprated change with equipment specifications.

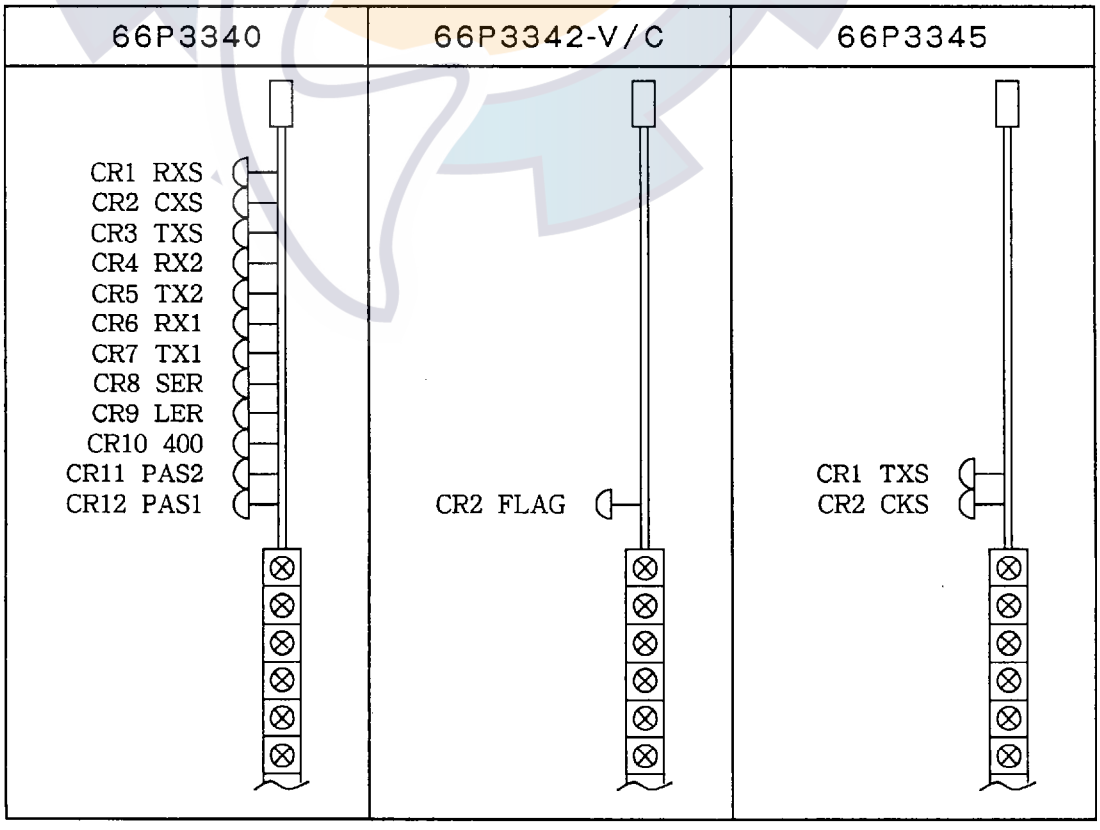

www.reelschematic.com

1) OCP Board 66P3340

LED			Status	Remarks
No.	Signal	Color		
CR6	RX1	YEL	◑	Serial data input from processor unit DS-310
CR7	TX1	YEL	●	Unused Serial output data to distance indicator DS-370
CR8	SER	YEL	● ○	Speed data output Output data valid: Off Output data invalid: Light
CR9	LER	YEL	● ○	Log pulse output Output data valid: Off Output data invalid: Light
CR10	400	YEL	◑ ●	Log pulse Turns off when speed is 0.0 kt.
CR11	PAS2	GRN	○	Lights when self check of work memory is OK.
CR12	PAS1	GRN	○	Lights when program ROM is OK.

2) OAV Board 66P3342-V

LED			Status	Remarks
No.	Signal	Color		
CR2	FLAG	YEL	○ ●	Changes state with JP1 flag.

3) OAC Board 66P3342-C

LED			Status	Remarks
No.	Signal	Color		
CR2	FLAG	YEL	○ ●	Changes state with JP1 flag.

4) ODD Board 66P3345

LED			Status	Remarks
No.	Signal	Color		
CR1	TXS	YEL	○ ●	Data output to remote display
CR2	CKS	YEL	○ ●	Shift pulse for data output to remote display

www.reelschematic.com

5.2. Self-check

The DS-30 has a self-check facility for general diagnosis of the major circuits. Execute the checks after all installation jobs are completed.

5.2.1. Procedure

1. Call up the main menu by pressing the MENU key.

2. Select the self-test item and press the MENU key. The sub-menu as shown below is displayed.

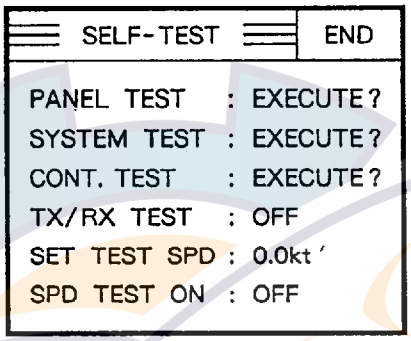

3. Select a self-test item to be executed and press the MENU key. As each self-test item is protected (locked), the following alert appears.

   This item is locked.
   Do you want to change setting?

4. Select "Yes" and press the MENU key twice, and the selected self-test is executed.

5.2.2. Panel Test

The panel test checks the operation panel keys for proper operation.

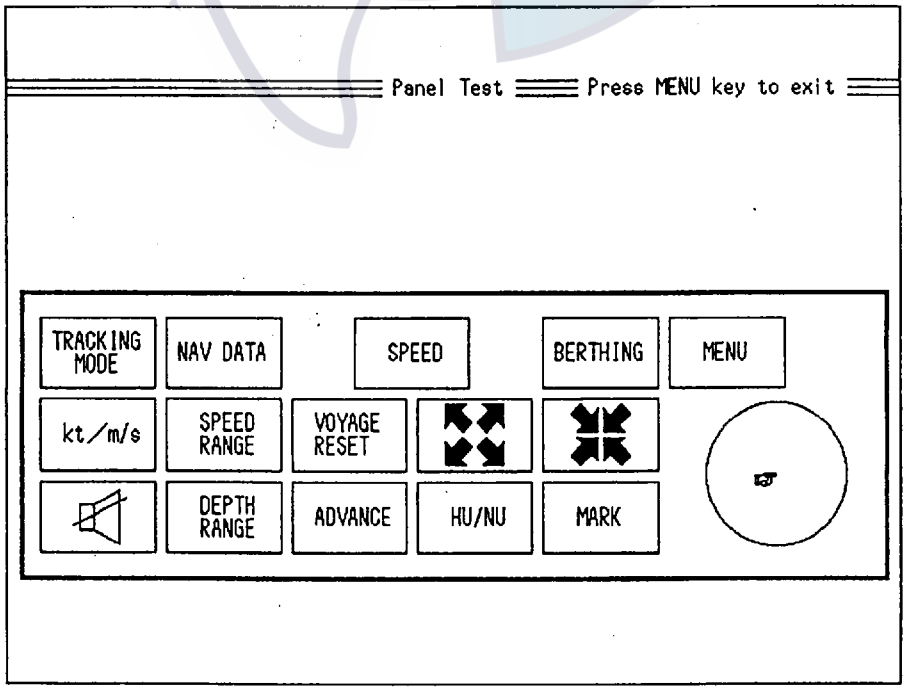

www.reelschematic.com

Press each key to see if the corresponding key mark on the screen is highlighted in reverse video. For the trackball, check that the hand pointer (☞) on the screen moves within the circle as the trackball is operated.

To terminate the panel test press the MENU key.

5.2.3. Single Test

The single test executes the system check for one cycle displaying the test result for each item checked.

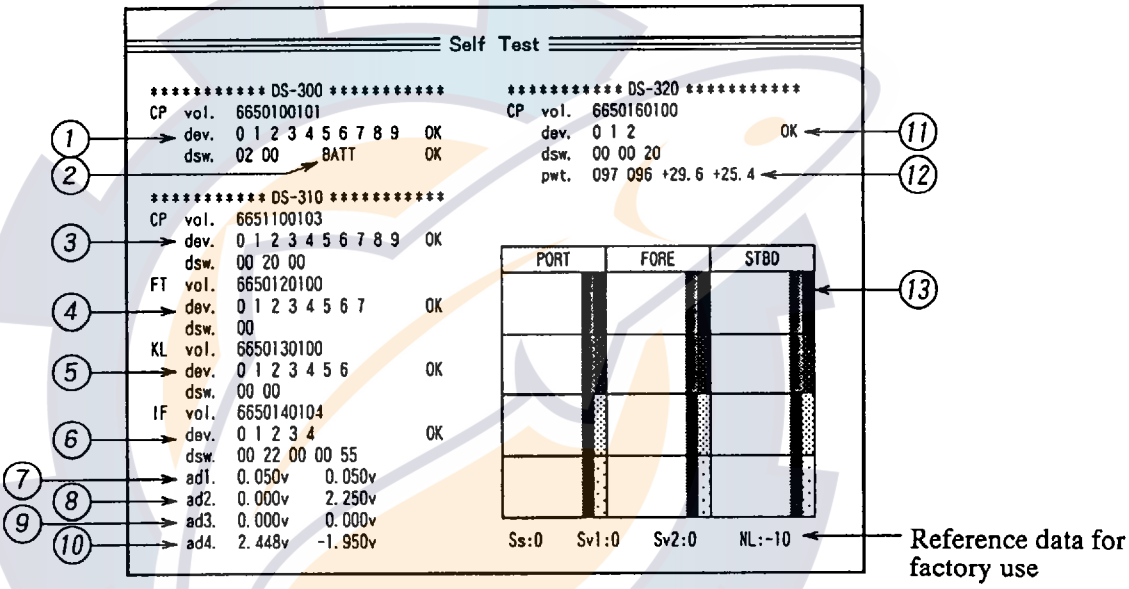

No.	Self-check Item	Description
1	Display Unit (DS-300) LCP Board Memory IC	dev. 0 1 2 3 4 5 6 7 8 9 OK Memory ICs are checked. If all checked ICs are normal. "OK" is displayed. If a faulty IC is detected, "*" is displayed to the right of the number corresponding to the faulty IC. The numbers 0 to 9 represent the following ICs. 0: EPROM 1: SRAM (Lower byte) 2: VRAM (Upper byte)) 3: Dual Port RAM 4: VRAM (D0 to D3 bits) 5: VRAM (D4 to D7 bits) 6: VRAM (D8 to D11) 7: VRAM (D12 to D15) 8: Color Pallet 9: EEPROM
2	Display Unit (DS-300) LCP Board DIP Switch Setting Battery Voltage Back-up Data	dsw. xx.xx BATT OK ↑ ↑ DIP SW S1, S2 setting Battery voltage and back-up data The result of battery voltage and back-up data check is displayed by three types of message: OK: Both battery voltage and back-up data are normal. WR: Battery voltage is low but back-up data is normal. NG: Back-up data is abnormal or data is not guaranteed.

www.reelschematic.com

No.	Self-check Item	Description
3	Processor Unit (DS-310) MCP Board Memory IC	dev. 0 1 2 3 4 5 6 7 8 9 OK The following memory ICs are checked. 0: EPROM 1: PSRAM1 (Lower byte) 2: PSRAM2 (Upper byte)) 3: PSRAM2 (Lower byte) 4: PSRAM2 (D0 to D3 bits) 5: SRAM (echo) 6: Dual Port RAM (MFT) 7: Dual Port RAM (MKL) 8: Color Pallet 9: EEPROM
4	Processor Unit (DS-310) MFT Board Memory IC	dev. 0 1 2 3 4 5 6 7 OK The following memory ICs are checked. The check result is displayed in the same way as item no 1. 0: EPROM 1: SRAM (D0 to D3) 2: SRAM (D4 to D7) 3: SRAM (D8 to D11) 4: SRAM (D12 to D15) 5: PSRAM (Lower byte) 6: PSRAM (Upper byte) 7: Dual Port RAM (MKL)
5	Processor Unit MKL Board Memory IC	dev. 0 1 2 3 4 5 6 OK The following memory ICs are checked. The check result is displayed in the same way as item no 1. 0: EPROM 1: SRAM 1(D0 to D7) 2: SRAM 2 (D7 to D15) 3: SRAM 2 (D0 to D7) 4: SRAM 2(D7 to D15) 5: Dual Port RAM 6: EEROM
6	Processor Unit (DS-310) MIF Board Memory IC	dev. 0 1 2 3 4 OK The following memory ICs are checked. The check result is displayed in the same way as item no 1. 0: EPROM 1: SRAM 2: Dual Port RAM 3: Gyro Interface 4: A/D Converter
7	Processor Unit (DS-310) MIF Board AD Conversion Voltage	ad1. ±x.xxxv ±x.xxxv ↑ ↑ Wind direction Wind speed Readout changes as follows depending on wind direction/speed: 0 to 4.9V for wind direction 0 to 540° 0 to 4.9V for wind speed 0 to 60m
8	Processor Unit (DS-310) MIF Board A/D Conversion Voltage	ad2. ±x.xxxv ±x.xxxv ↑ ↑ Unused Engine tachometer -4.9V to +4.9V depending on engine revolution speed.
9	Processor Unit (DS-310) MIF Board A/D Conversion Voltage	ad3. ±x.xxxv ±x.xxxv ↑ ↑ Unused Unused
10	Processor Unit (DS-310) MIF Board A/D Conversion Voltage	ad4. ±x.xxxv ±x.xxxv ↑ ↑ Ship's mains Internal reference voltage (2.54V) Ship's mains: 2.445 to 2.500V Internal reference voltage: -1.950 to -2.000V
11	Transceiver Unit (DS-320) NCP Board Memory IC	dev. 0 1 2 OK The following memory ICs are checked. The check result is displayed in the same way as item no 1. 0: EPROM 1: SRAM 2: A/D Converter

www.reelschematic.com

No.	Self-check Item	Description
12	Transceiver Unit (DS-320) NCP Board AD Conversion Value	pwt xxx xxx xx.x xx.x ↑ a ↑ b ↑ c ↑ d a) 100VAC: reading is 95 or 96 at 100VAC b) TX 100VDC: reading is 95 or 96 at 100VDC c) XDCR surface temp.: displays actual temperature d)XDCR mold material temp.: displays actual temperature
13	Color Pattern	Color test patterns are displayed. They are an orange bar and a 16-color bar which are alternately displayed, checking color generators in the display unit.

Note: 1 Number which follows "vol." is program number with least significant two digits showing version number.

2 Number which follows "dsw" is DIP switch setting.

www.reelschematic.com

5.2.4. Continuous Test

The continuous test executes the system check repeatedly. In addition to the check items of the single test, it displays the transmission voltage/current and received echoes for port, fore and starboard beams.

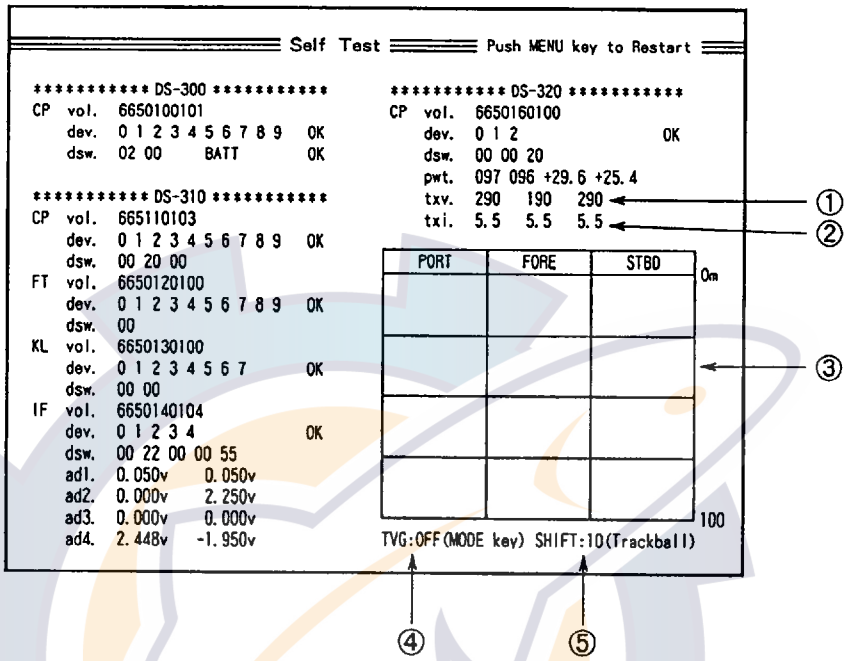

No.	Self-check Item	Description
1	TX Voltage	txv. xxx.x xxx.x xxx.x Fore Beam STBD Beam Port Beam TX voltage is normal if reading is more than 180 for all three beams. NOTE: Readings may fluctuate. Read a peak value.
2	TX Current	txi. x.xx x.xx x.xx Fore Beam STBD Beam Port Beam TX current is normal if reading is more than 3.0A for all three beams. NOTE: Readings may fluctuate. Read a peak value.
3	Received Echo	Displays received echoes for fore, starboard and port beams. When speed readings are abnormal, check that there is no interruption of echoes due to aeration. Use DEPTH RANGE key to change the depth scale.
4	TVG/ON/OFF	TRACKING MODE key turns on/off the TVG (Time Varied Gain) which is applied to received echoes displayed in item 3. When TVG is ON, propagation attenuation of sound in water is compensated so that echoes from targets with the same property are displayed in the same intensity irrespective of depth where targets are located.
5	SHIFT	Shows gain for echoes displayed in item 3. Use the TRACKBALL to change the gain.

www.reelschematic.com

5.2.5. TX/RX Test

The TX/RX test checks the transceiver circuit and the transducer for each beam.

When the speed readings measured by DS-30 are abnormal and echoes shown in the continuous test seem weak for a particular beam, the transceiver circuit or the transducer for that beam may be defective.

In beam FORE-AFT test, the ship's speed is measured by using the fore and starboard beams, without using the port beam. Likewise, in beam STBD-PORT test, the fore beam is not used, and in beam FORE-PORT test, the starboard beam.

If, for example, the speed readings are normal in beam FORE-STBD test but abnormal in beam STBD-PORT test and FORE-STBD tests, the transceiver or the transducer for the port beam is faulty.

www.reelschematic.com

5.3. Checking External Noise and Interference

External noise level can be measured without transmission on the continuous check screen.

5.3.1. External Noise Check

1) Preparation

1. Remove 3A fuse in the transceiver unit..
2. Display the continuous check screen.
3. Set the TVG to OFF by operating the MODE key.
4. Set the depth range at maximum by operating the DEPTH RANGE key.

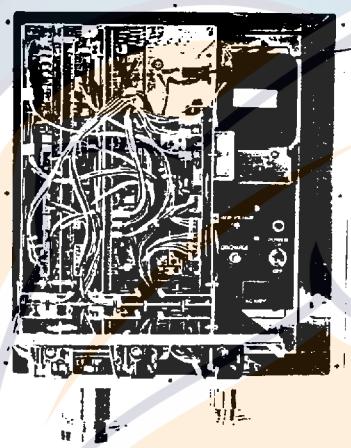

2) Check at Mooring

1. Adjust the SHIFT (echo gain) by operating the TRACKBALL and note the SHIFT reading when the color of noise in the echo data window changes from blue to the background color.
2. The reading is normally 7 or higher. If it is less than 7, noise is excessive.

3) Check at Cruising

1. With the SHIFT reading set at the value noted at "check at mooring", run the ship at various speeds.
2. Observe the echo test window for the three beams. Noise is displayed in one of the 16 colors shown below depending on its intensity, where the color changes by one gradation whenever noise level is doubled.

Black (lowest) → blue → light blue → cyan → light cyan → light green → green → yellow green → yellow-orange → orange → vermilion → red → reddish brown → brown → dark brown (highest)

www.reelschematic.com

3. Confirm that the noise level is almost even on all three beams and periodic pulse noise does not appear.

4. If the color changes more than 4 gradations compared to that at mooring, noise is excessive. In this case check the ground of each unit. (If the cruising noise is too heavy, you must consider transducer relocation.)

5.3.2. Interference Check

Perform this check at a location where the depth is greater than 50 meters (preferably about 100 meters) and no other ships are in the vicinity.

1. Set the SHIFT reading to the value noted at "Check at Mooring".

2. At a depth greater than 50 meters, operate other equipment one by one, observing the echo check window.

3. When there is interference, multiple strings are displayed as shown at right.

4. Put back the 3A fuse for normal operation.

5. Turn off all ultrasonic wave generating equipment (echo sounder, etc.).

6. Operate the DS-30 in the ground tracking mode. Confirm that the ship's speed and direction readout is accurate.

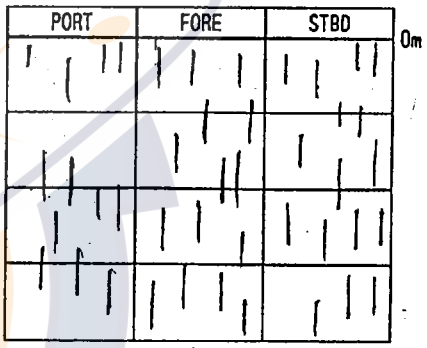

Interference

7. Observing the display, turn on and operate the ultrasonic wave generating equipment one by one with their output power and pulselength set to the maximum.

8. If the ship's speed and direction readout changes abnormally when some equipment is turned on and operated, that equipment is interfering with the DS-30.

5. The interference can be removed by connecting the transmission trigger pulse (KP) of the interfering equipment to the processor unit. See page 3-10.

www.reelschematic.com

This page is intentionally left blank.

www.reelschematic.com

FURUNO

S-1

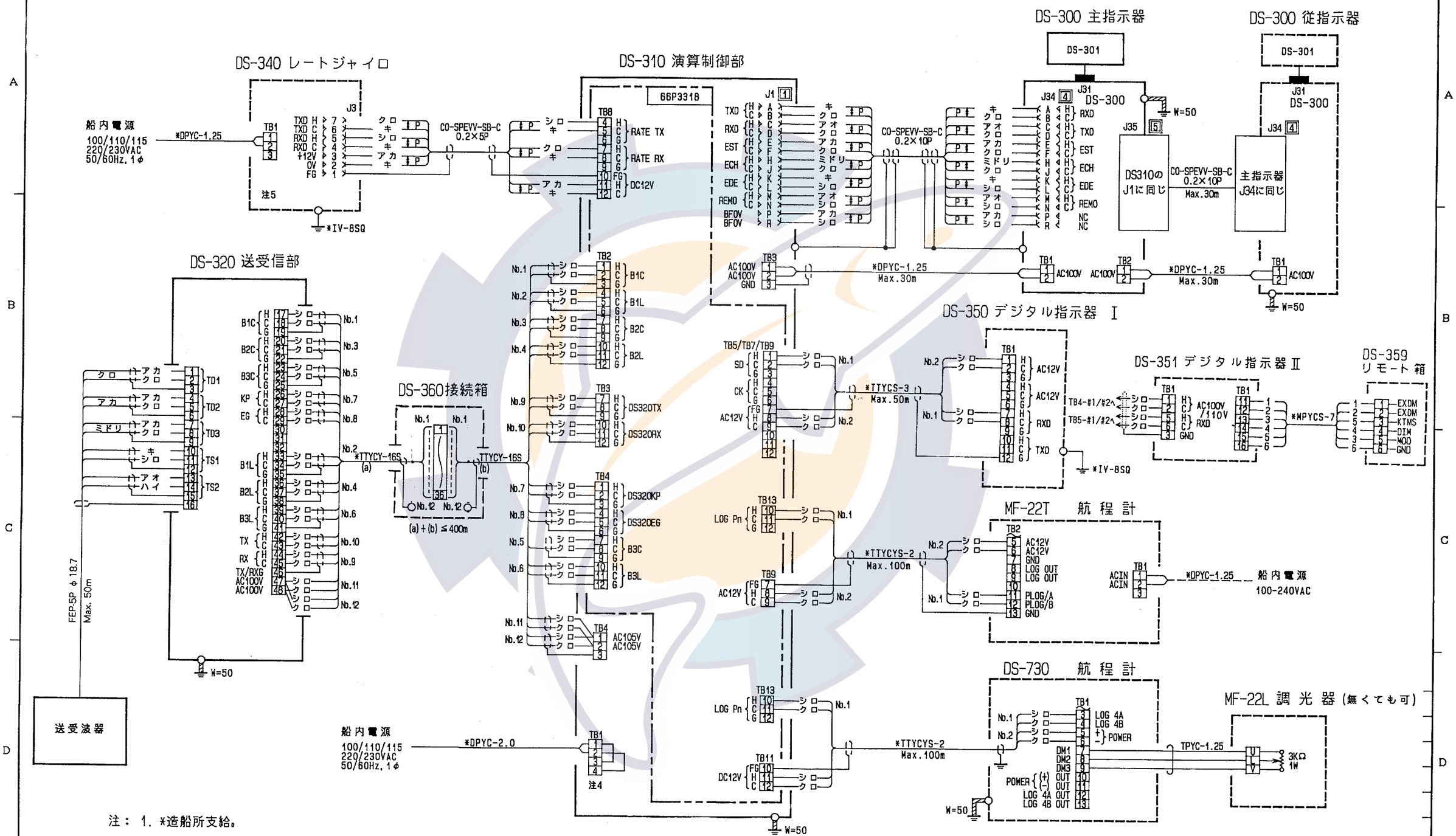

注： 1. *造船所支給。

2. ケーブルの外装は塗装を取り除いてクランプで接地すること。

3. 各ユニットは全て船体に接地させること。

4. 船内電源に応じてトランスのタップ変更必要。

5. 船内電源に応じてアワーメーターの変更必要。

6. □ 内の数値はガイドピンA（太）のピン位置を示す。

承認 APPROVED	FEB・15・'92 T.NAKANO	名称 TITLE: DS-30 相互結線図 (1/2)
検図 CHECKED	FEB・13・'92 M.USUDA	
製図 DRAWN	FEB・13・'92 TOMITA	図番 DWG. NO. J7236－C01－F

FURUNO ELECTRIC CO., LTD.

www.reelschematic.com

FURUNO

S-2

DS-310 演算制御部

DS-370 分配器 (注1)

外部KP *TTYCYS-1 TB3 EXKP1 EXKP2

ジャイロ信号 (AD-100) *TTYCYS-2 又はCO-SPEVV-SB-C 0.2×2P TB6 GYROD GYROC

真針路 *TTYCYS-2 又はCO-SPEVV-SB-C 0.2×2P REALD REALC

KP出力 *TTYCYS-1 TB8 KPOUT

主機回転計 *TTYCYS-1 TB11 PROP

傾斜計 (PITCH) *TTYCYS-1 PITCH

傾斜計 (ROLL) *TTYCYS-1 ROLL DC12V

風向 *TTYCYS-1 TB13 WIND DIR

風速 *TTYCYS-1 WIND SPD

RUDDER

LOG Pn

航程信号 *TTYCYS-1 TB12 200P

J2 TXD RXD BFOV CO-SPEVV-SB-C 0.2×5P CIF/NMEA データ

J3 TXD RXD BFOV CO-SPEVV-SB-C 0.2×5P CIF/NMEA データ

J4 (AUX1) J5 (AUX2) TRS RRS OURS TH TC RH RC OVHC CO-SPEVV-SB-C 0.2×5P 予備

TB10 TXD LG400T ALARM DC12V No.1 No.2 No.3 No.4

*TTYCYS-4S Max.50m

OCP 66P3340 RXD LG400T ALARM OV DC12V

船内電源 100/110/115 220/230VAC 50/60Hz, 1φ *DPYC-1.25 TB1

TB3 AC100V OUT AC100V OUT AC100V OUT AC100V OUT

クロ シロ No.2

TB14 200P *TTYCYS-1 航程信号

66P3318

OAV 66P3342V ANALOG V STATUS *TTYCYS-1 船速アナログ電圧信号 *TTYCYS-1 船速ステータス接点信号

OAC 66P3342C ANALOG C STATUS *TTYCYS-1 船速アナログ電流信号 *TTYCYS-1 船速ステータス接点信号

OLG 66P3346L LG200R (LG-400R) LG200R (LG-400R) STATUS GND LG400T AC12V *TTYCYS-2 航程信号 *TTYCYS-2 航程信号又は船速ステータス接点信号 No.1 No.2

OAD 66P3342D ANALOG DSP RANGE *TTYCYS-3 No.1 No.2

2台目の指示器は#6~#8に接続

ODD 66P3345 CKS TXS SPD IN GND DC12V AC12V No.1 No.2 No.3 *TTYCY-4S Max.150m

OTX 66P3346T TXD LG400T ALARM GND DC12V AC12V No.1 注2 *TTYCYS-3 Max.150m

DS-389 レンジ切換器 ANALOG DSP RANGE 注3

MF-22T 航程計 TB2 AC12V AC12V PLOG 1A PLOG 1B GND TB1 *DPYC-1.25 船内電源 100-240VAC

DS-730 航程計 TB1 LOG 4A LOG 4B POWER

MF-22A/DS-381/382 アナログ指示器 *TTYCS-1 METER *DPYC-1.25

MF-22L 調光器 船内電源 100-240VAC

MF-11D 副指示器 (LCD仕様の事) TB1 PSRA PSRB GND PTRSA PTRSB GND +8V 0V GND +5V 0V GND (MAX. 2台)

DS-351 デジタル指示器II TB1 AC100V/110V RXD GND *MPYCS-7

DS-359 リモート箱 Kt/s/z DIMMER MODE GND

注：1. 分配器には任意の組合せで最大7枚の基板が組込み可能 。
2. 分配器を2個使用の場合は OTX基板に接続。
3. レンジ切換器は MF-22Aの場合のみ必要。

承認 APPROVED	FEB・15・'92 T.NAKANO	名称 TITLE: DS-30 相互結線図 (2/2)
検図 CHECKED	FEB・14・'92 M.USUDA	
製図 DRAWN	FEB・13・'92 TOMITA	図番 DWG.NO. J7236－C02－H

FURUNO ELECTRIC CO., LTD.

www.reelschematic.com

List of Outline Drawings

Name	Page
DS-300 Display/Display Unit	D-2
DS-301 Display/Operation Panel	D-3
DS-310 Processor Unit	D-4
DS-320 Transceiver Unit	D-5
	D-6 (None)
DS-330 Transducer	D-7
DS-330/331 Hull Unit	D-8
DS-335 Seachest (with Gate Valve)	D-9
DS-360 Junction Box	D-10
DS-370 Distribution Box	D-11
DS-340 Rate-of-turn Gyro	D-12
DS-350 Digital Indicator	D-13
DS-351 Digital Indicator (Bulkhead mount)	D-14
DS-351 Digital Indicator (Flush mount)	D-15
DS-359 Remote Box (Bulkhead mount)	D-16
DS-359 Remote Box (Flush mount)	D-17
DS-381 Analog Indicator (Flush mount)	D-18
DS-382 Analog Indicator (Bulkhead mount)	D-19
MF-22A-1 Analog Indicator (Flush mount)	D-20
MF-22A-2 Analog Indicator (Bulkhead mount)	D-21
MF-22A-3 Analog Indicator (Flush mount)	D-22
MF-22A-4 Analog Indicator (Flush mount)	D-23
MF-22A-5 Analog Indicator	D-24
MF-22A-6 Analog Indicator (Flush mount)	D-25
MF-22A-7 Analog Indicator (Flush mount)	D-26
MF-22A-8 Analog Indicator (Bulkhead mount)	D-27
DS-389 Range Switch Box	D-28
DS-730 Distance Indicator (Tabletop mount)	D-29
DS-730 Distance Indicator (Flush mount)	D-30
MF-22T-1 Distance Indicator (Flush mount)	D-31
MF-22T-2 Distance Indicator (Bulkhead mount)	D-32
MF-22T-3 Distance Indicator (Tabletop mount)	D-33
Main Display Cabinet (70°)	D-34
Main Display Cabinet (45°)	D-35

www.reelschematic.com

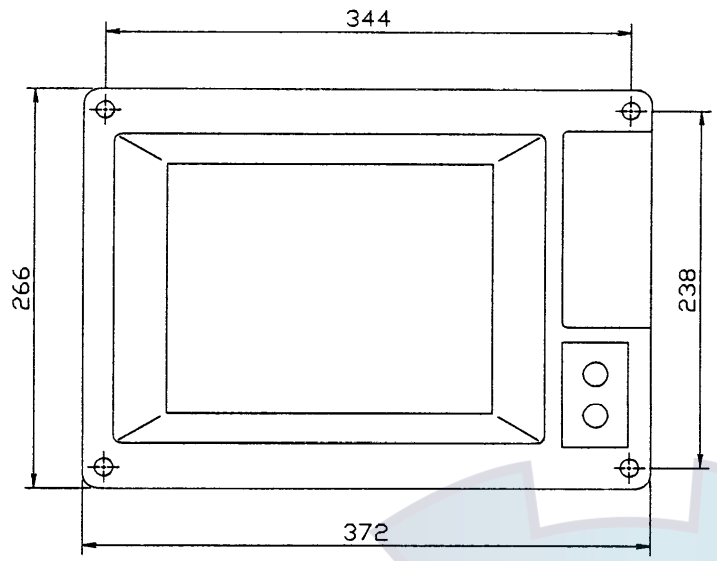

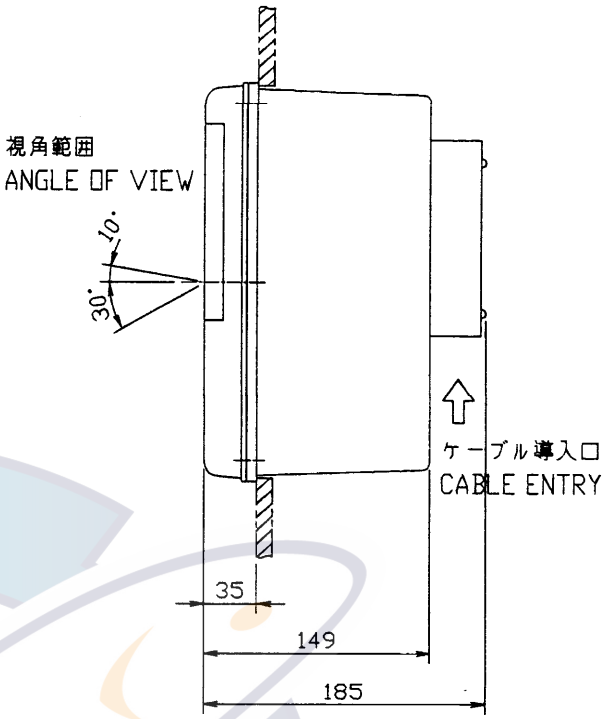

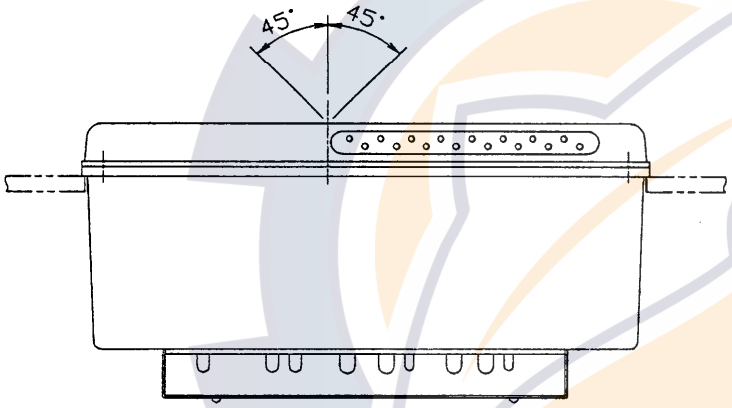

寸法区分(mm) DIMENSION	公差(mm) TOLERANCE
0 < L ≤ 50	±1.5
50 < L ≤ 100	±2.5
100 < L ≤ 500	±3

表1 TABLE 1

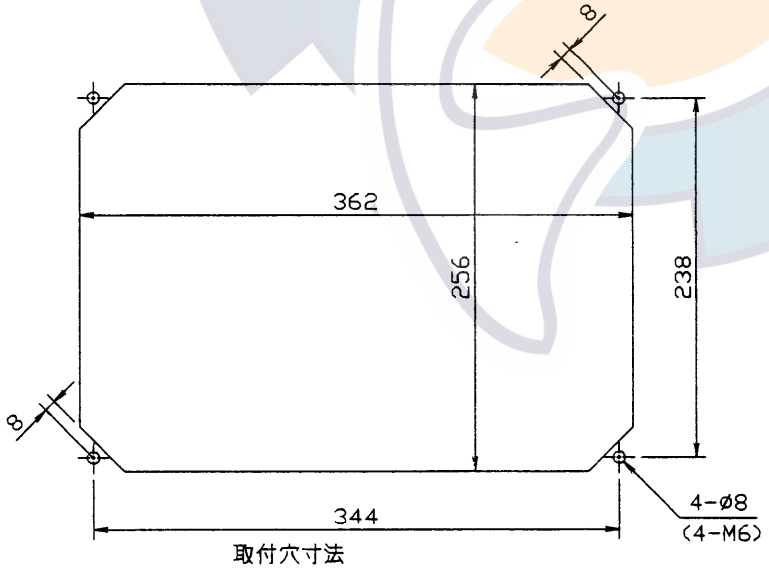

取付穴寸法
CUTOUT DIMENSIONS

注記
1）指定なき寸法公差は表1による。

NOTE
1. TABLE 1 INDICATES TOLERANCE OF DIMENSIONS.

DRAWN Sep. 10 '01 T.YAMASAKI			TITLE DS-300
CHECKED Sep.10'01 Y.K			名称 主指示器
APPROVED Sep.10'01 Y.K	DS-30		外寸図
SCALE 1/5 MASS 9.5 ±10% kg			NAME MAIN DISPLAY
DWG.No. C7236-G01- F			OUTLINE DRAWING

FURUNO ELECTRIC CO., LTD.

www.realschematic.com

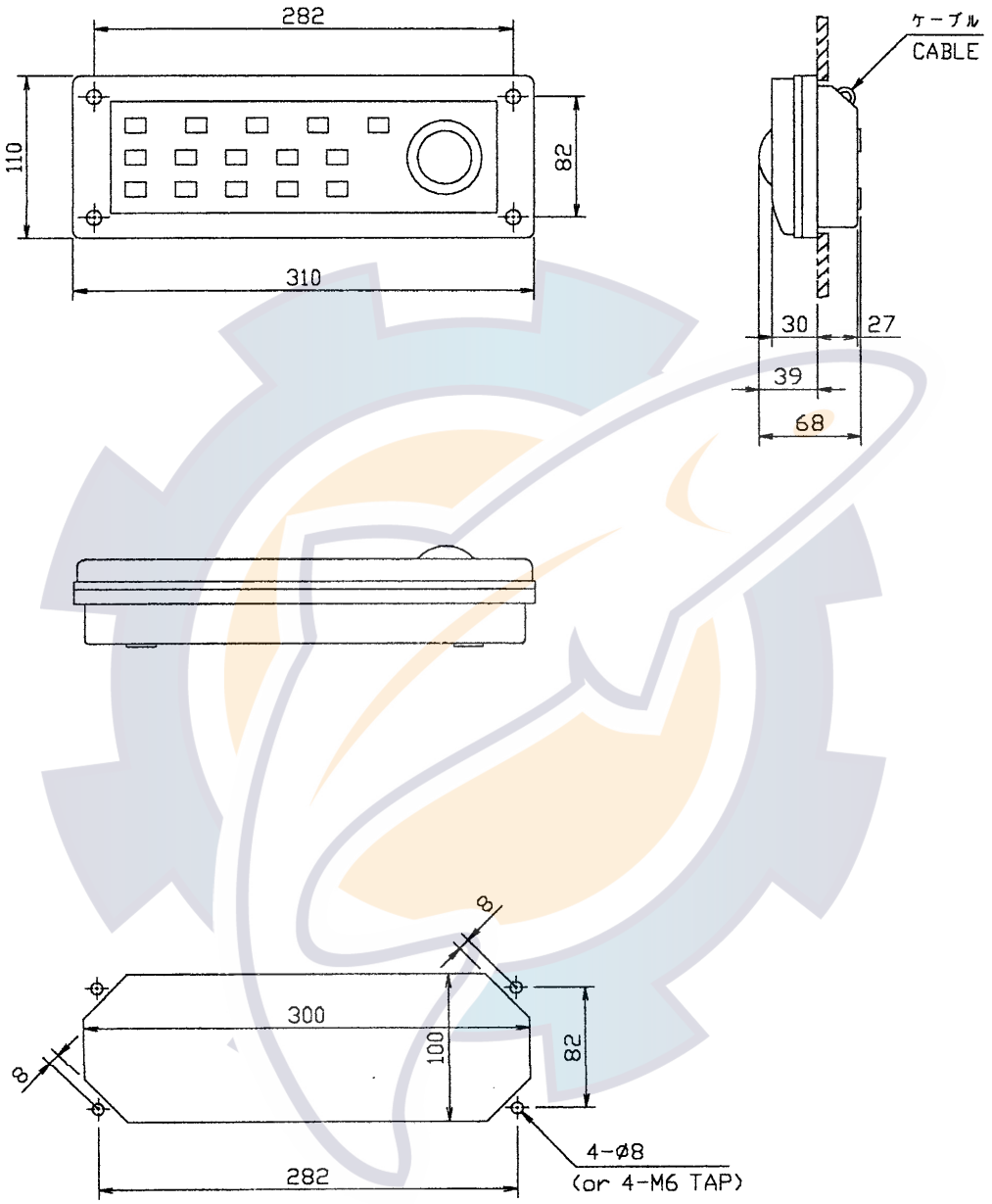

取付寸法
MOUNTING DIMENSION

DS-30

品番 ITEM	品名 NAME	材質 MATERIAL	数量 Q'TY	図番 DWG.NO.	摘要 REMARKS

DRAWN Jun. 27 '01 T.YAMASAKI	TITLE DS-301
CHECKED Jun. 27 '01 Y.KIMURA	名称 指示部・操作箱
APPROVED Jun. 27 '01 Y.KIMURA	外寸図
SCALE 1/5 MASS 1.6 ±10% kg	NAME DISPLAY, OPERATION PANEL
DWG.No. C7236-G02-D	OUTLINE DRAWING

FURUNO ELECTRIC CO., LTD.

www.reelschematic.com

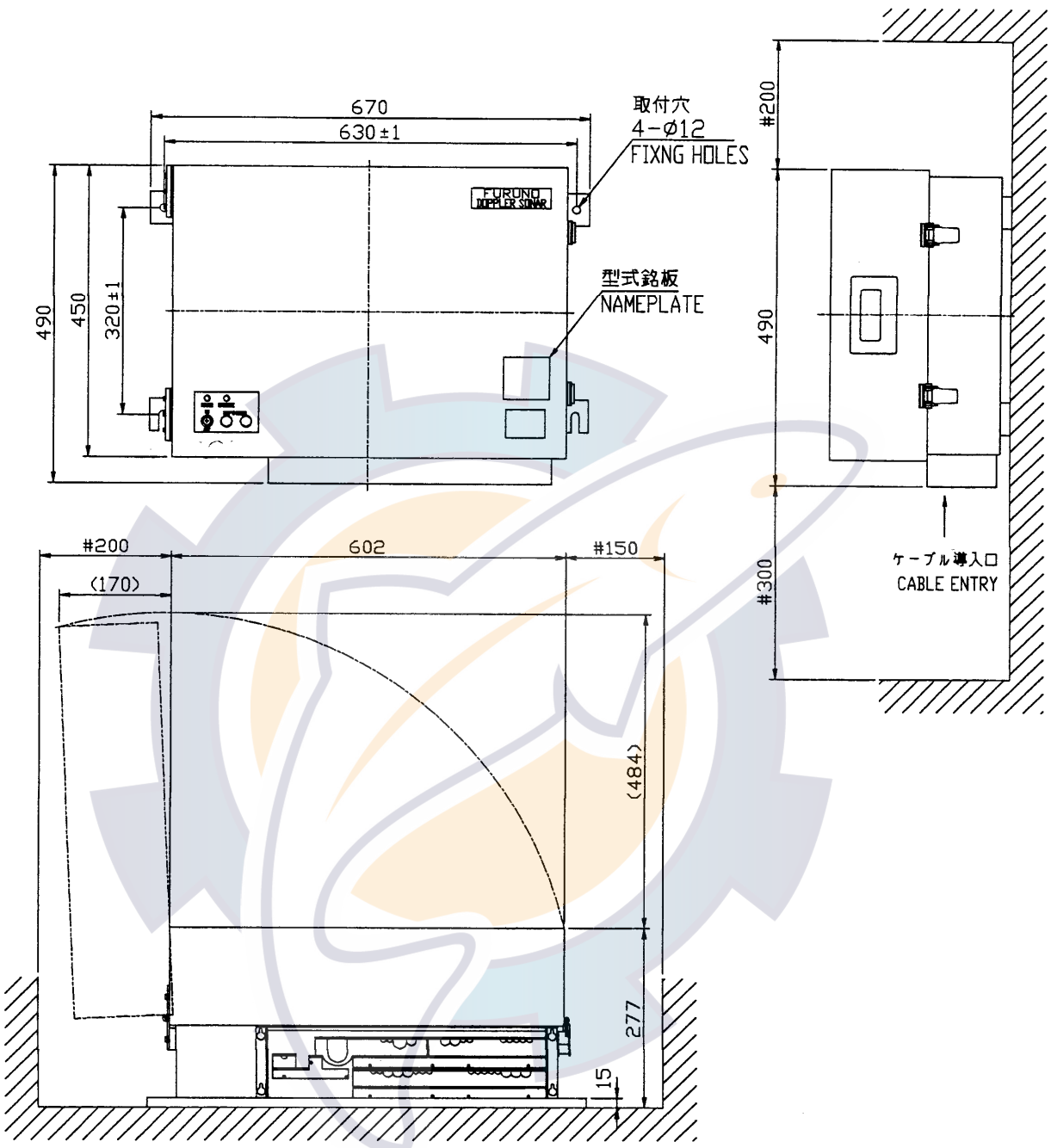

表1 TABLE 1

寸法区分(mm) DIMENSION	公差(mm) TOLERANCE
0 < L ≦ 50	±1.5
50 < L ≦ 100	±2.5
100 < L ≦ 500	±3
500 < L ≦ 1000	±4

注記

1）指定なき寸法公差は表1による。
2）#：推奨する最小サービス空間寸法。

NOTE

1. TABLE 1 INDICATES TOLERANCE OF DIMENSIONS.
2. #: RECOMMENDED SERVICE CLEARANCE.

DRAWN Dec. 10 '01 T.YAMASAKI			TITLE DS-310
CHECKED Dec 11 '01 Y.K.			名称 演算制御部
APPROVED Dec 11 '01 Y.K.			外寸図
SCALE 1/10 MASS 40±6 ±10% kg			NAME PROCESSOR UNIT
DWG.No. C7236-G03- H			OUTLINE DRAWING

FURUNO ELECTRIC CO., LTD.

www.reelschematic.com

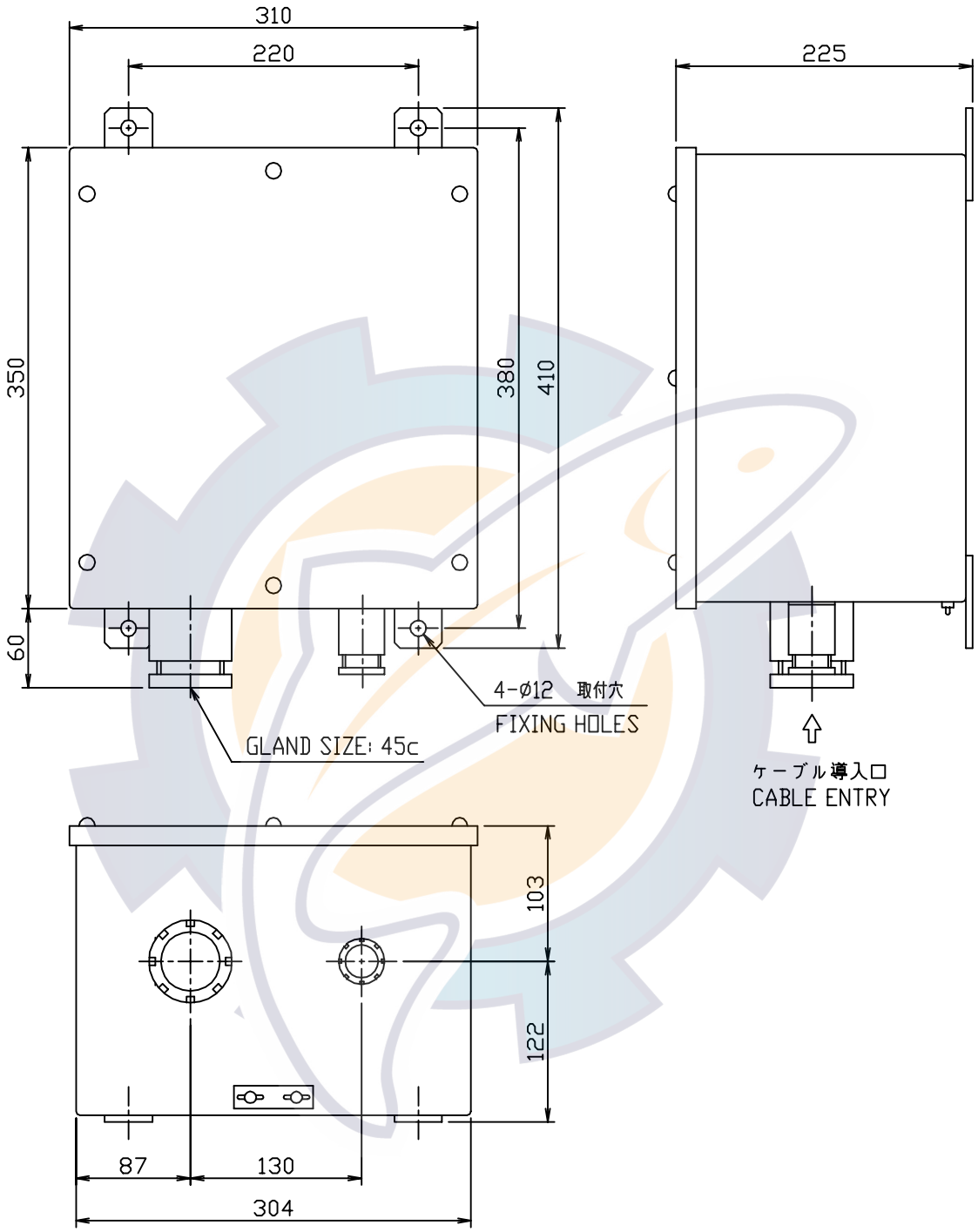

品番 ITEM	品名 NAME	材質 MATERIAL	数量 Q'TY	図番 DWG.NO.	摘要 REMARKS

DRAWN Sep. 21, '04	E. MIYOSHI	TITLE	DS-320
CHECKED	TAKAHASHI. T	名称	送受信器
APPROVED	Y. Hatai		外寸図
SCALE 1/5	MASS 14 ±10% kg	NAME	TRANSCEIVER UNIT
DWG.No.	C7236-G04-F		OUTLINE DRAWING

FURUNO ELECTRIC CO., LTD.

www.reelschematic.com

FURUNO

D-6

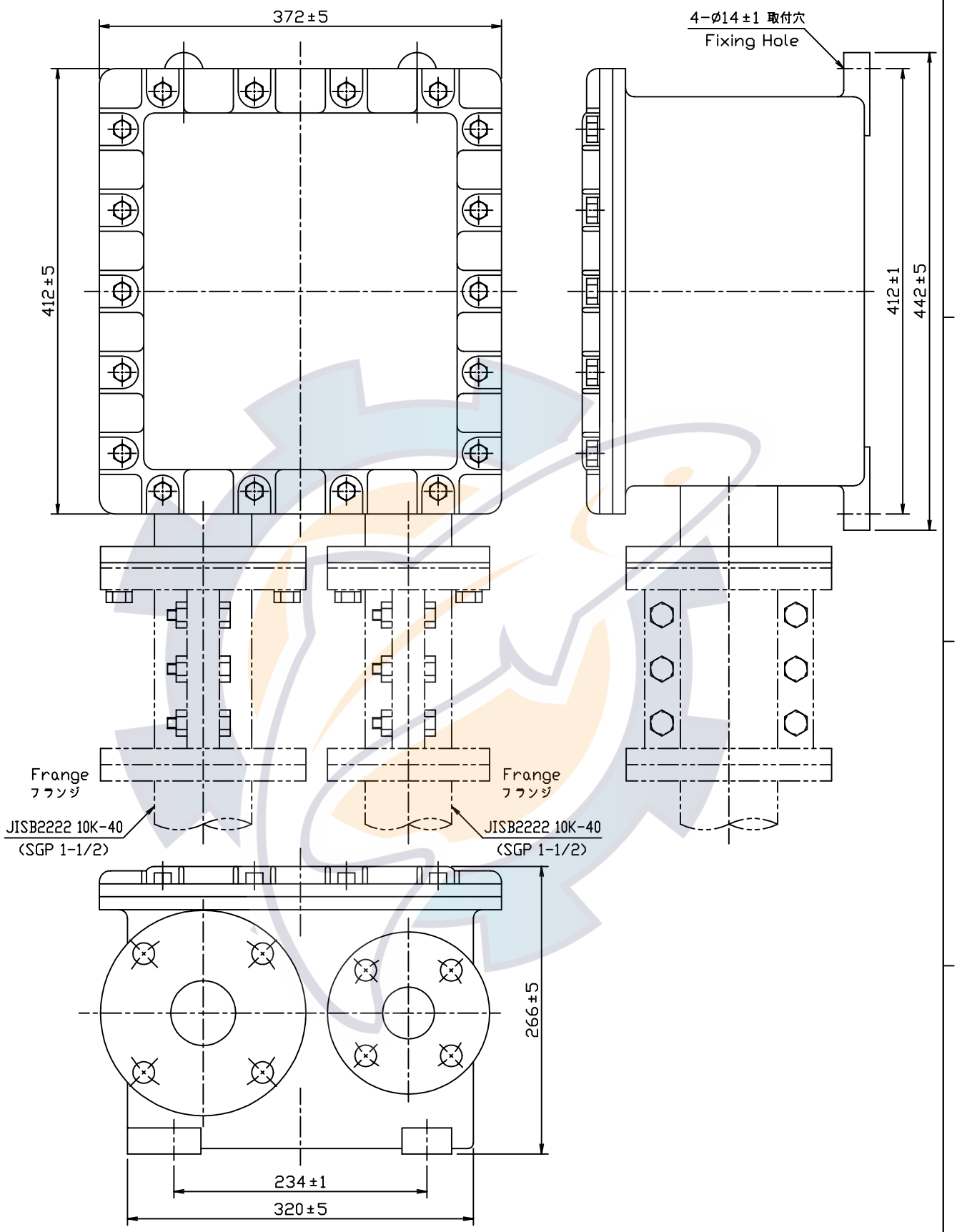

品番 ITEM	品名 NAME	材質 MATERIAL	数量 Q'TY	図番 DWG.NO.	摘要 REMARKS

DRAWN Jun. 27 '01	T.YAMASAKI	TITLE	DS-325
CHECKED Jun. 27 '01	Y.KIMURA	名称	耐圧防爆式送受信器
APPROVED Jun. 27 '01	Y.KIMURA		外寸図
SCALE 1/5	MASS 48.5±5 ±10% kg	NAME	EXPLOSION-PROOF TYPE TRANSCEIVER UNIT
DWG.No.	C7236-G13-C		OUTLINE DRAWING

FURUNO ELECTRIC CO., LTD.

www.reelschematic.com

FURUNO

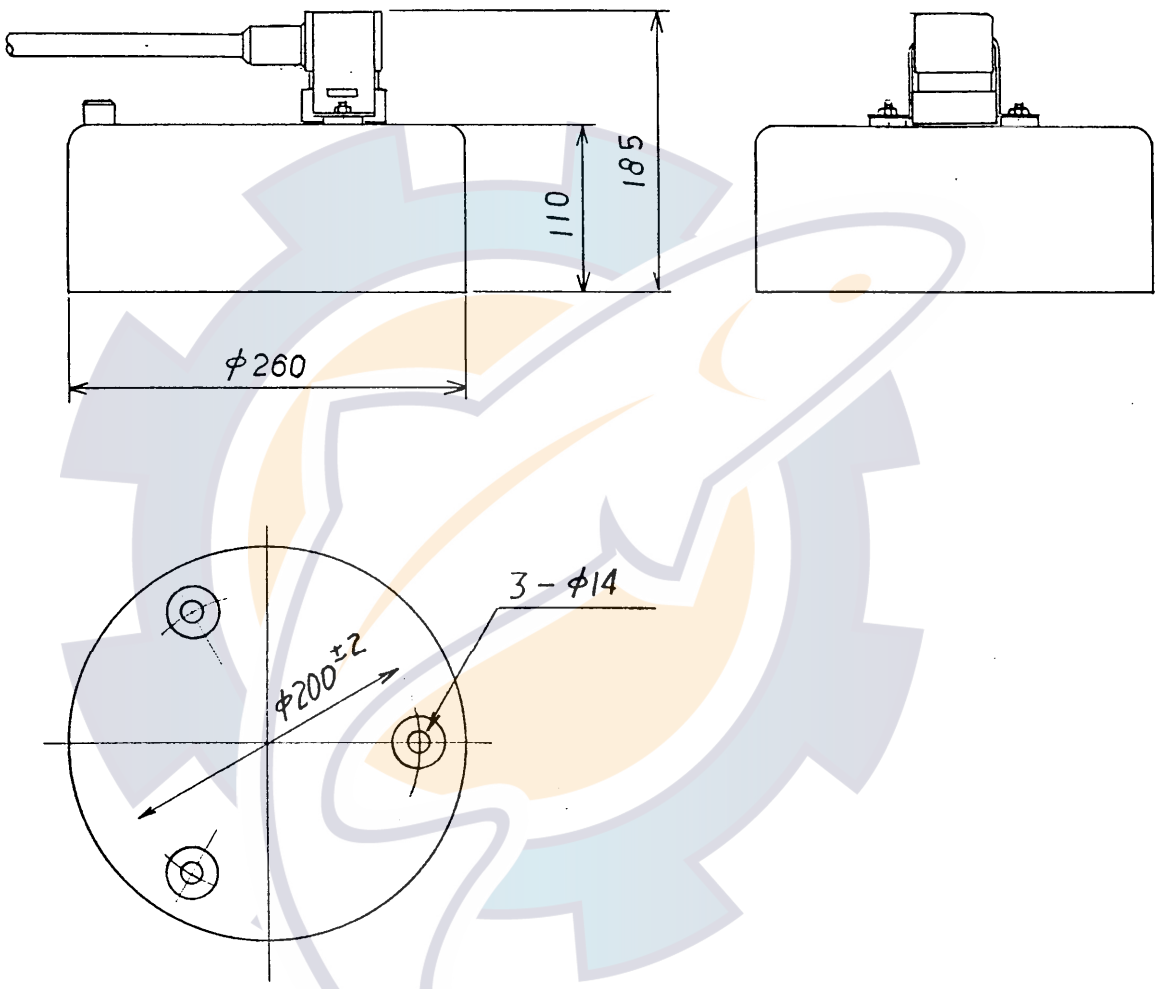

品番 ITEM	品名 NAME	材質 MATERIAL	数量 Q'TY	図番 DWG.NO.	摘要 REMARKS

承認 APPROVED	APR. 8 '92 TAKADO	三角法 THIRD ANGLE PROJECTION		名称 TITLE	DS-330 送受波器 TRANSDUCER
検図 CHECKED	APR. 8 '92 M. USUDA	尺度 SCALE	1/5		
製図 DRAWN	APR. 8 '92 TOMITA	重量 WEIGHT	9 kg (ケーブル含まず)	図番 DWG.NO.	C7236-G14-A

FURUNO ELECTRIC CO., LTD.

www.reelschematic.com

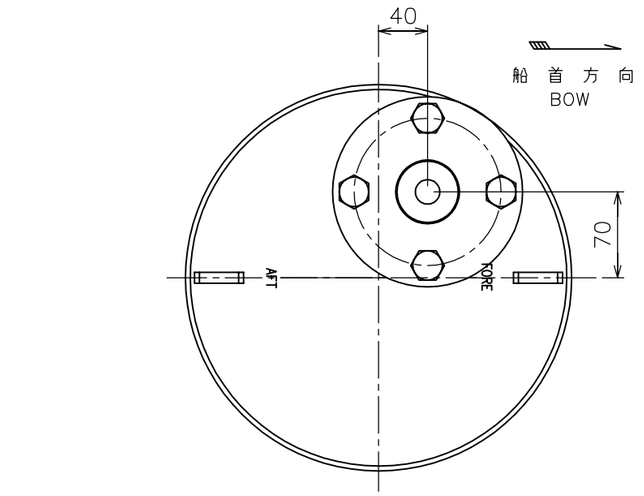

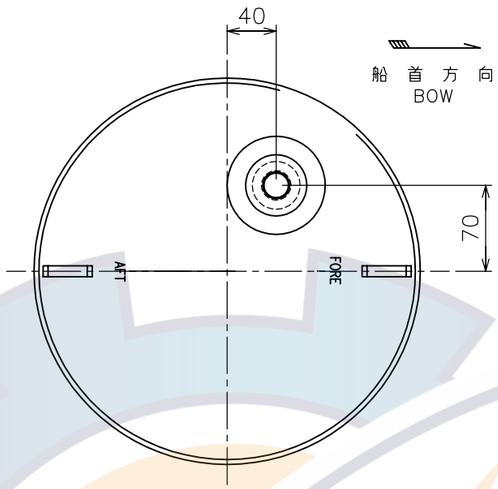

注　記

1) 船底タンクの板厚は標準２５ｍｍです。それ以上の厚さが必要な場合は別途打合せ願います。
2) 船底タンクの材質はＮＫ（日本海事協会）規格のＫＳＴＰＧ３７０及びＫＡ材です。
3) ⑤のケーブルグランドは標準支給の予備品工具で締付けてください。

NOTES

1. STANDARD THICKNESS OF THE CASING IS 25mm.
   TO BE DISCUSSED WHEN THICKER CASING IS REQUIRED.
2. MATERIAL OF TANK MEETS NK (NIPPON KAIJI KYOKAI) STANDARD KSTPG370 AND KA.
3. TIGHTEN CABLE GLAND ⑤ WITH THE TOOL SUPPLIED.

表1 (Table1)

寸法区分（mm） Dimensions	公差（mm） Tolerance
L≦50	±1.5
50<L≦100	±2.5
100<L≦500	±3

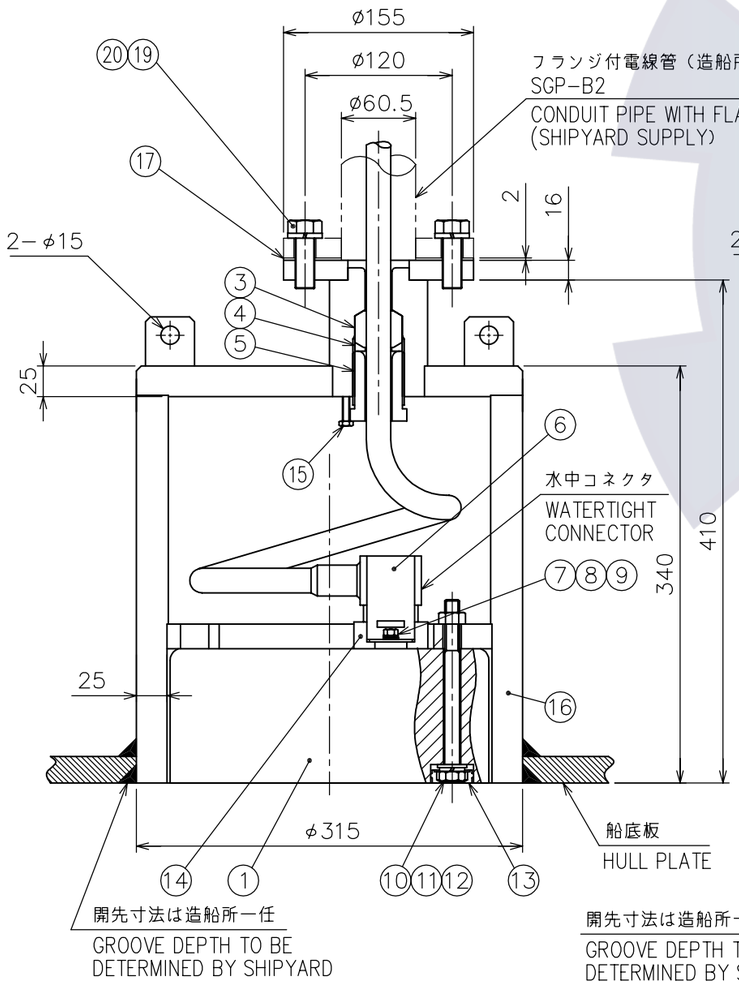

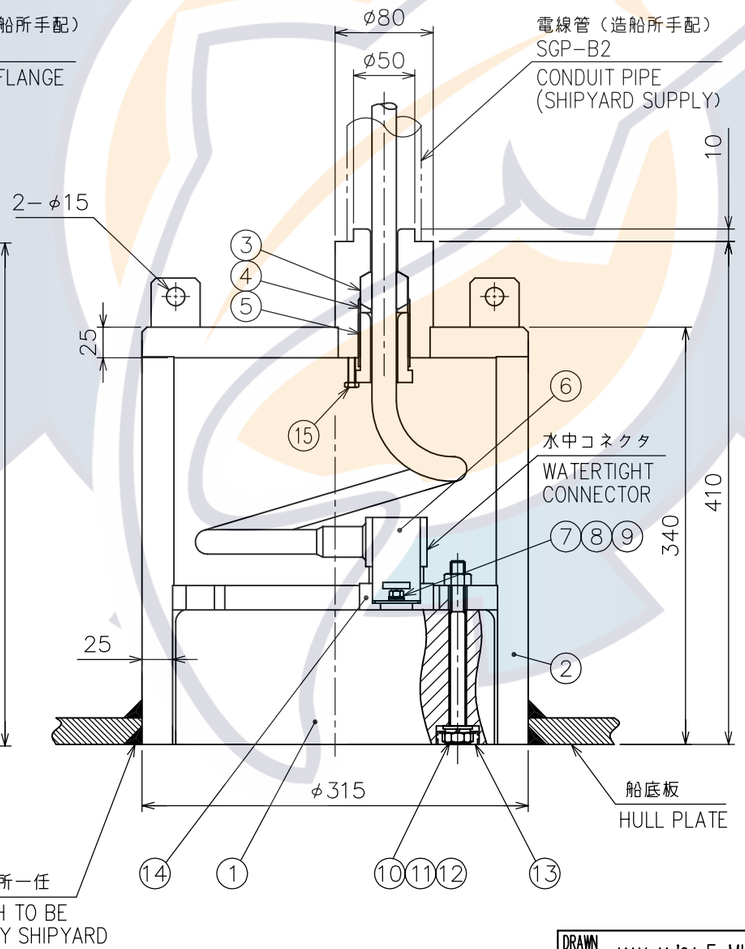

品番 ITEM	品名 NAME	材質 MATERIAL	数量 Q'TY	図番 DWG.NO.	摘要 REMARKS
20	バネ座金 SPRING WASHER	SUS316L	4	M16	
19	六角ボルト HEX, BOLT	SUS316L	4	M16×45	
18					
17	ガスケット GASKET	T No.1995	1	JIS 10K×50A	
16	タンク本体 CASING EPOXY ZINC RICH PRIMER	KSTPG370/KA	1	66-019-1211	船級認定材 CLASSIFICATION SOCIETY APPROVED MATERIAL
15	六角ボルト HEX, BOLT	SUS316L	1	M6×30	
14	ＣＮ押えリング CN-RING HOLDER	TB35C	1	66-019-1303	
13	キャップ BOLT CAP	PU	3	66-019-1983	
12	平座金 FLAT WASHER	SUS316L	3	66-019-1205	
11	バネ座金 SPRING WASHER	SUS316L	6	M12	
10	六角ボルト HEX, BOLT	SUS316L	3	66-019-1984	
9	バネ座金 SPRING WASHER	TB340	2	M6	
8	平座金 FLAT WASHER	TB340	2	M6	
7	六角ナット HEX, NUT	TB340	2	M6	
6	ＣＮ押え金具 CONNECTOR HOLDER	TP35C	1	66-019-1302	
5	ケーブルグランド CABLE GLAND	SUS316L	1	66-019-1204	
4	平座金 FLAT WASHER	SUS316L	1	66-019-1203	
3	防水ゴム RUBBER GASKET	CR	1	66-019-1202	
2	タンク本体 CASING EPOXY ZINC RICH PRIMER	KSTPG370/KA	1	66-019-1201	船級認定材 CLASSIFICATION SOCIETY APPROVED MATERIAL
1	送受波器 TRANSDUCER		1	DS-330	

A）フランジ使用の場合
A) INSTALLATION USING A FLANGE

B）フランジを使用しない場合
B) INSTALLATION W/O FLANGE

DRAWN	MAY. 11 '04 E. MIYOSHI		TITLE DS-330/331
CHECKED	TAKAHASHI. T		名称 送受波器タンク
APPROVED	Y. Hatai	DS-30	外寸図
SCALE	1/5	MASS 80.0 ±10% kg 質量（①⑥⑦⑧⑨⑩⑪⑫⑬⑭を除く） (MASS WITHOUT ①⑥⑦⑧⑨⑩⑪⑫⑬⑭)	NAME TRANSDUCER TANK
DWG.No.	C7236-G05- N	66-019-120G-7	OUTLINE DRAWING

www.reelschematic.com

FURUNO

D－9

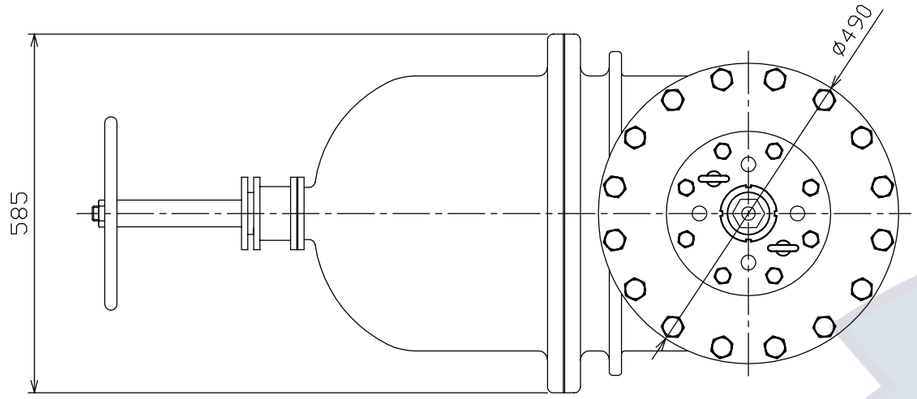

注記／NOTES

1. 底上げタンク㉖、送受波器㉗の船首－船尾方向、水平方向の各取付誤差は±1度以内として下さい。
   THE TIME OF WELDING SPACER ㉖ TO SHIP'S HULL PLATE AND ATTACHING TRANSDUCER ㉗, FORE-AFT AND HORIZONTAL ATTACHMENT ERROR ARE MADE INTO LESS THAN ±1 DEGREE.
2. ゲートバルブ㉓を取付ける際はナット⑰の回り止め対策として、ボルト⑮及びナット⑰を脱脂後、#271(日本ロックタイト)を塗布して完全に締めて下さい。
   PRIOR TO SECURE NUTS ⑰, CLEAN BOLTS ⑮ AND NUTS ⑰ WITH SOLVENT AND APPLY LOCKTIGHT #271 TO THREADS OF THEM.
3. ゲートバルブ部以外の部分は 4.9×10^5 Pa の水圧試験がされています。
   SEACHEST EXCEPT GATE VALVE IS TESTED UNDER 4.9×10^5 Pa PRESSURE.
4. ゲートバルブ㉓は、22.5° ピッチで任意の方向に取付け可能です。
   GATE VALVE ㉓ CAN BE ATTACHED IN THE ARBITRARY DIRECTION IN 22.5° PITCH.
5. 送受波器面にはマリンスター２０を塗布しています。
   その他の船底塗料を塗布しないで下さい。
   THE TRANSDUCER FACE IS COATED WITH MARINESTAR20.
   DO NOT APPLY OTHER TYPE OF PAINT.
6. 指定外の寸法公差は表1の通りです。
   DIMENSIONAL TOLERANCE, IF NOT SPECIFIED, IS AS TABLE 1.

寸法区分（ｍｍ） DIMENSION	公差（ｍｍ） TOLERANCE
Ｌ≦５０	±１．５
５０＜Ｌ≦１００	±２．５
１００＜Ｌ≦５００	±３
５００＜Ｌ≦１０００	±４
１０００＜Ｌ≦２０００	±５

表１ TABLE 1

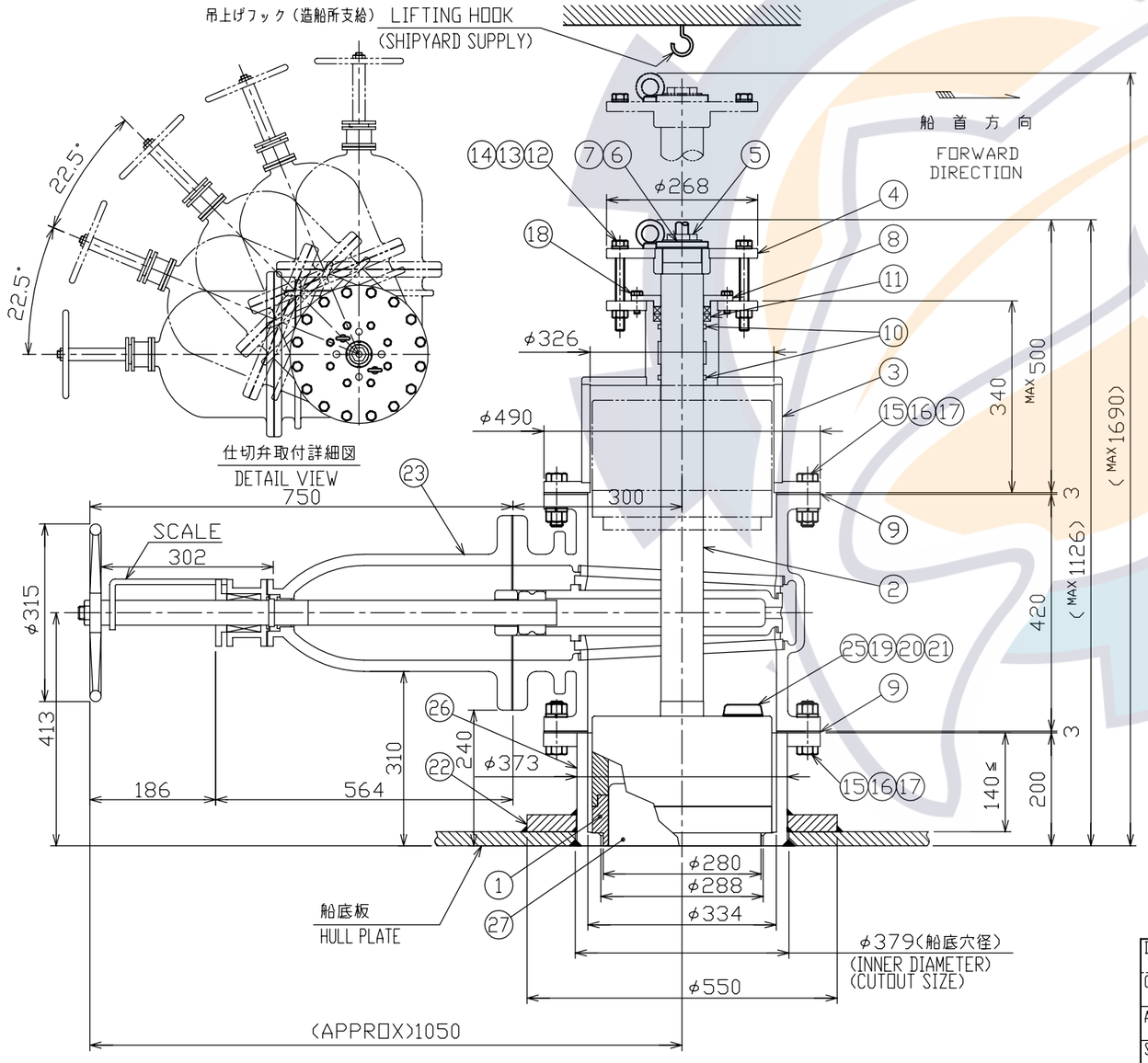

ITEM	NAME	MATERIAL	Q'TY	DWG.No.	REMARKS
27	TRANSDUCER		1	DS-330	
26	SPACER LACQUER PRIMER	KAS	1	66-019-1431	CLASSIFICATION SOCIETY APPROVED MATERIAL
25	ANTI-CRROSIVE ZINC		3	ZAP B-1 1/2	
23	GATE VALVE ALKYD RESIN PRIMER	SC450	1	JISF7366-350	
22	DOUBLING PLATE LACQUER PRIMER	KAS	1	66-019-1432	CLASSIFICATION SOCIETY APPROVED MATERIAL
21	FLAT WASHER	SUS316L	3	M12	
20	SPRING WASHER	SUS316L	3	M12	
19	HEX. BOLT	SUS316L	3	M12×20	
18	HEX. BOLT	SUS316L	4	M10×35	
17	HEX. NUT	SUS316L	32	M22	
16	SPRING WASHER	SUS316L	32	M22	
15	HEX. BOLT	SUS316L	32	M22×80	
14	HEX. NUT	SUS316L	8	M16	
13	SPRING WASHER	SUS316L	8	M16	
12	HEX. BOLT	SUS316L	8	M16×150	
11	BRINE SEAL		1SET	VALQUA No,7061	
10	O-RING	CR	2	JISB2401 1A P75	
9	GASKET t=3mm	JOINT SHEET	2	66-019-1404	
8	FIXING PLATE	SUS316L	1	66-019-1407	
7	WASHER	SUS316L	1	AW14	
6	HEX. NUT	SUS316L	1	AN14	
5	FIXING GRAND	SUS316L	1	66-019-1204	
4	UPPER PLATE LACQUER PRIMER	SS400	1	66-019-1403	
3	SEACHEST CAP LACQUER PRIMER	KSTPG370	1	66-019-1402	CLASSIFICATION SOCIETY APPROVED MATERIAL
2	SHAFT	SUS316L	1	66-019-1433	
1	HEAD CAP	SUS316L	1	66-019-1434	

DRAWN Jan. 26 '04 T.YAMASAKI		TITLE	DS-335
CHECKED Jan. 26 '04 T.MATSUGUCHI		名称	ゲートバルブ式送受波器タンク
APPROVED Feb.10'04 T.Matsuguchi	DS-30		船底装備図
SCALE 1/10 MASS 600 ±10% kg	質量は送受波器を含まず。 MASS W/O TRANSDUCER.	NAME	SEACHEST WITH GATE VALVE
DWG No. C7236-T06- D	66-019-140G-5		HULL UNIT INSTALLATION

FURUNO ELECTRIC CO., LTD.

www.reelschematic.com

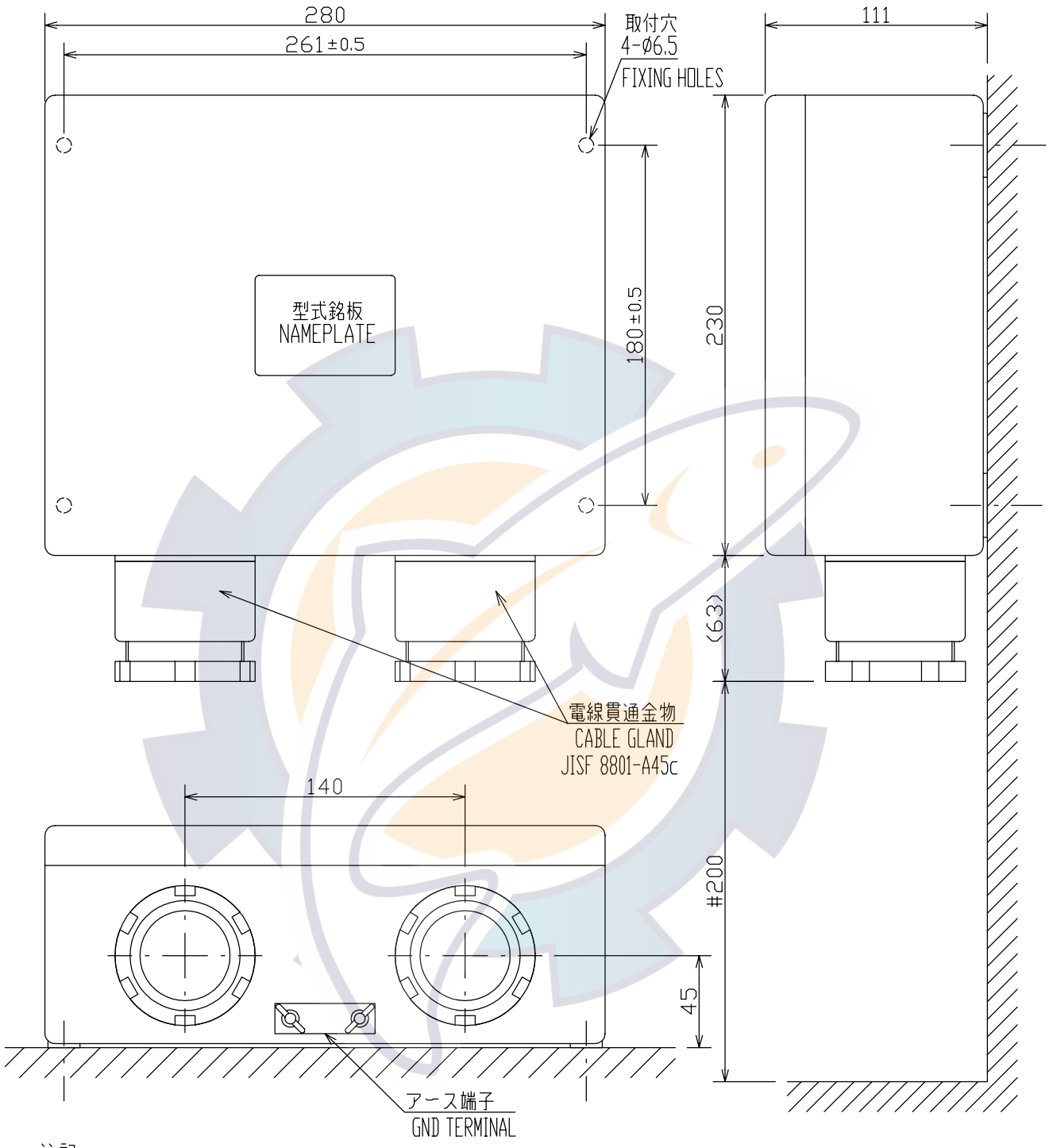

注記
1）指定なき寸法公差は表1による。
2）#印寸法は最小サービス空間寸法とする。

NOTE
1. TABLE 1 INDICATES TOLERANCE OF DIMENSIONS WHICH IS NOT SPECIFIED.
2. #: MINIMUM SERVICE CLEARANCE.

表1 TABLE 1

寸法区分(mm) DIMENSION	公差(mm) TOLERANCE
0 < L ≦ 50	±1.5
50 < L ≦ 100	±2.5
100 < L ≦ 500	±3

DRAWN	Feb. 9 '04 T.YAMASAKI	TITLE	DS-360
CHECKED	Feb. 9 '04 T.TAKENO	名称	接続箱
APPROVED	Feb.12'04 H.HAYASHI		外寸図
SCALE	1/3	MASS 5.9 ±10% kg	NAME JUNCTION BOX
DWG.No.	C7236-G06- F		OUTLINE DRAWING

FURUNO ELECTRIC CO., LTD.

www.reelschematic.com

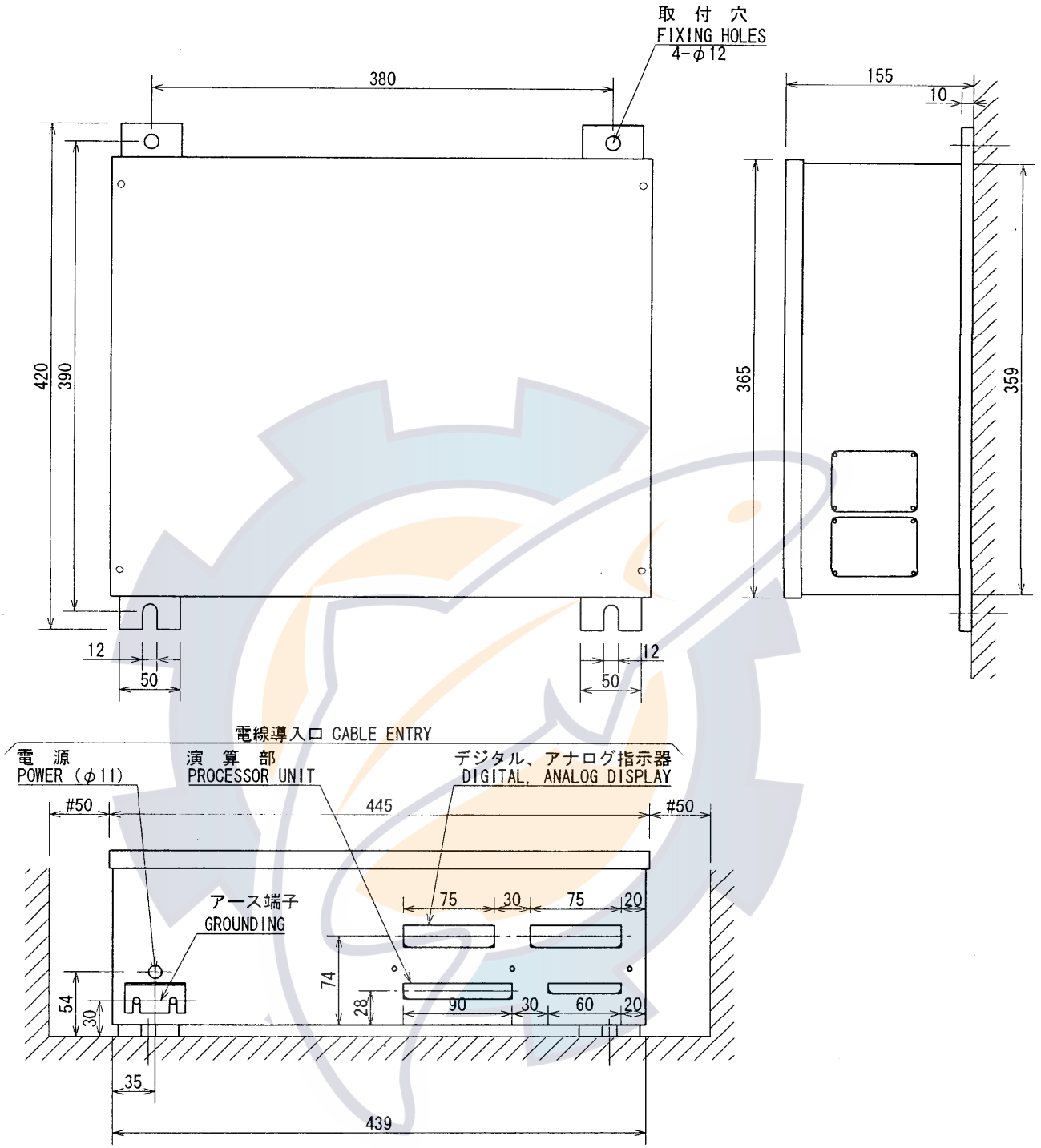

表１ TABLE 1

寸法区分(mm) DIMENSION	公差(mm) TOLERANCE
0 ＜ L ≦ 50	±1.5
50 ＜ L ≦ 100	±2.5
100 ＜ L ≦ 500	±3
500 ＜ L ≦ 1000	±4

注記
1）指定なき寸法公差は表１による。
2）＃：推奨する最小サービス空間寸法。

NOTE
1. TABLE 1 INDICATES TOLERANCE OF DIMENSIONS.
2. #: RECOMMENDED SERVICE CLEARANCE DIMENSION.

DRAWN July 26'00 T.YAMASAKI		TITLE	DS-370
CHECKED July 27 '00 Y.Kimura		名称	分 配 器
APPROVED July 27 '00 T.Kimura			外 寸 図
SCALE 1/5 MASS 19 kg		NAME	DISTRIBUTION UNIT
DWG. No. C7236-G10-G			OUTLINE DRAWING

FURUNO ELECTRIC CO., LTD.

www.radioschematic.com

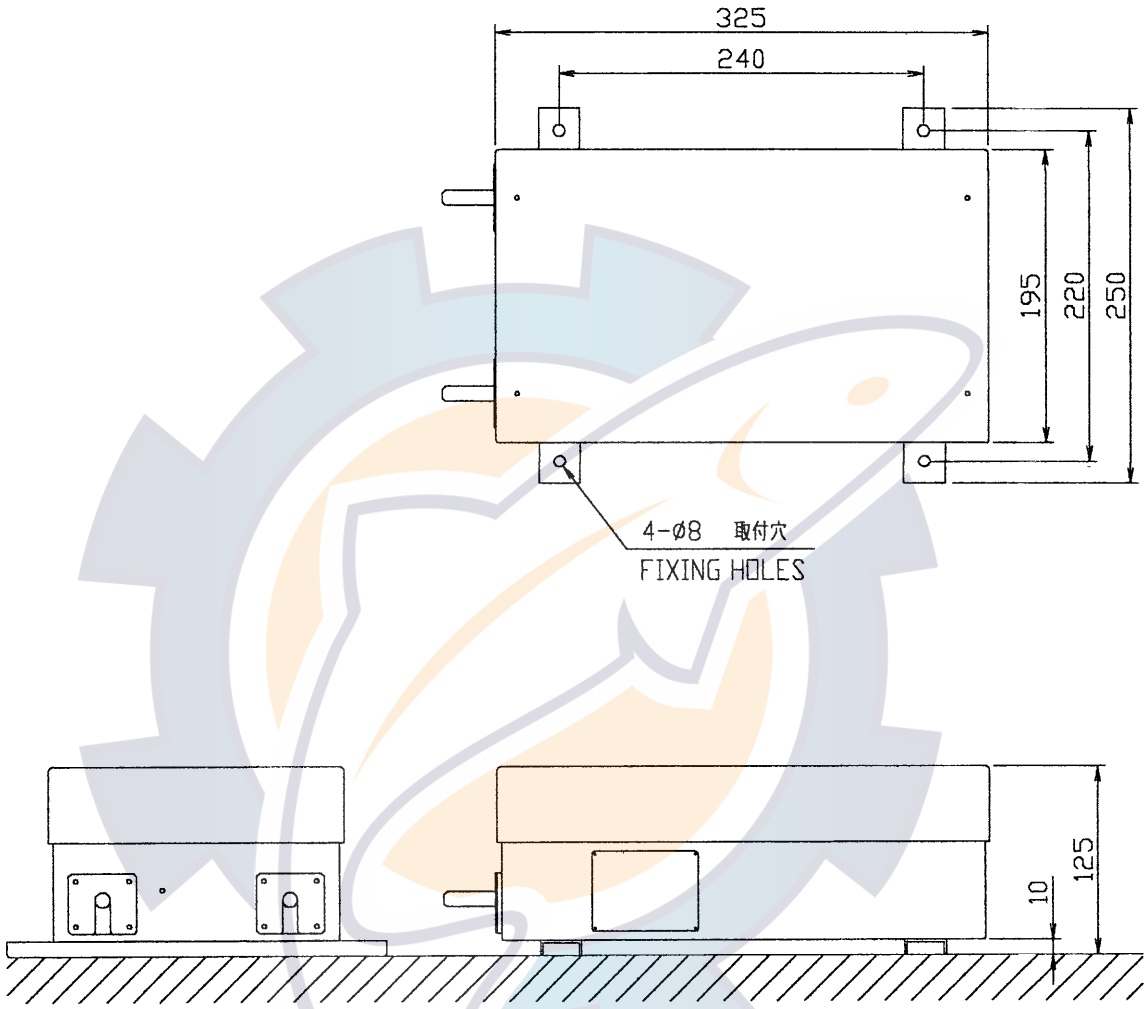

本装置は水平（± 1°）に設置する必要があります。
（水平装置の水平度調整範囲は ± 2° 以下の場所を選んで下さい）
INSTALL UNIT LEVEL TO WITHIN ±1°. ERROR ADJUSTABLE UP TO ±2°.

DS-30	品番 ITEM	品名 NAME	材質 MATERIAL	数量 Q'TY	図番 DWG.NO.	摘要 REMARKS
DRAWN Jun. 27 '01 T.YAMASAKI			TITLE DS-340			
CHECKED Jun. 27 '01 Y.KIMURA			名称 レートジャイロ変換器			
APPROVED Jun. 27 '01 Y.KIMURA			外寸図			
SCALE 1/5 MASS 6 ±10% kg			NAME RATE-OF-TURN GYRO			
DWG.No. C7236-G07-E			OUTLINE DRAWING			

FURUNO ELECTRIC CO., LTD.

www.reelschematic.com

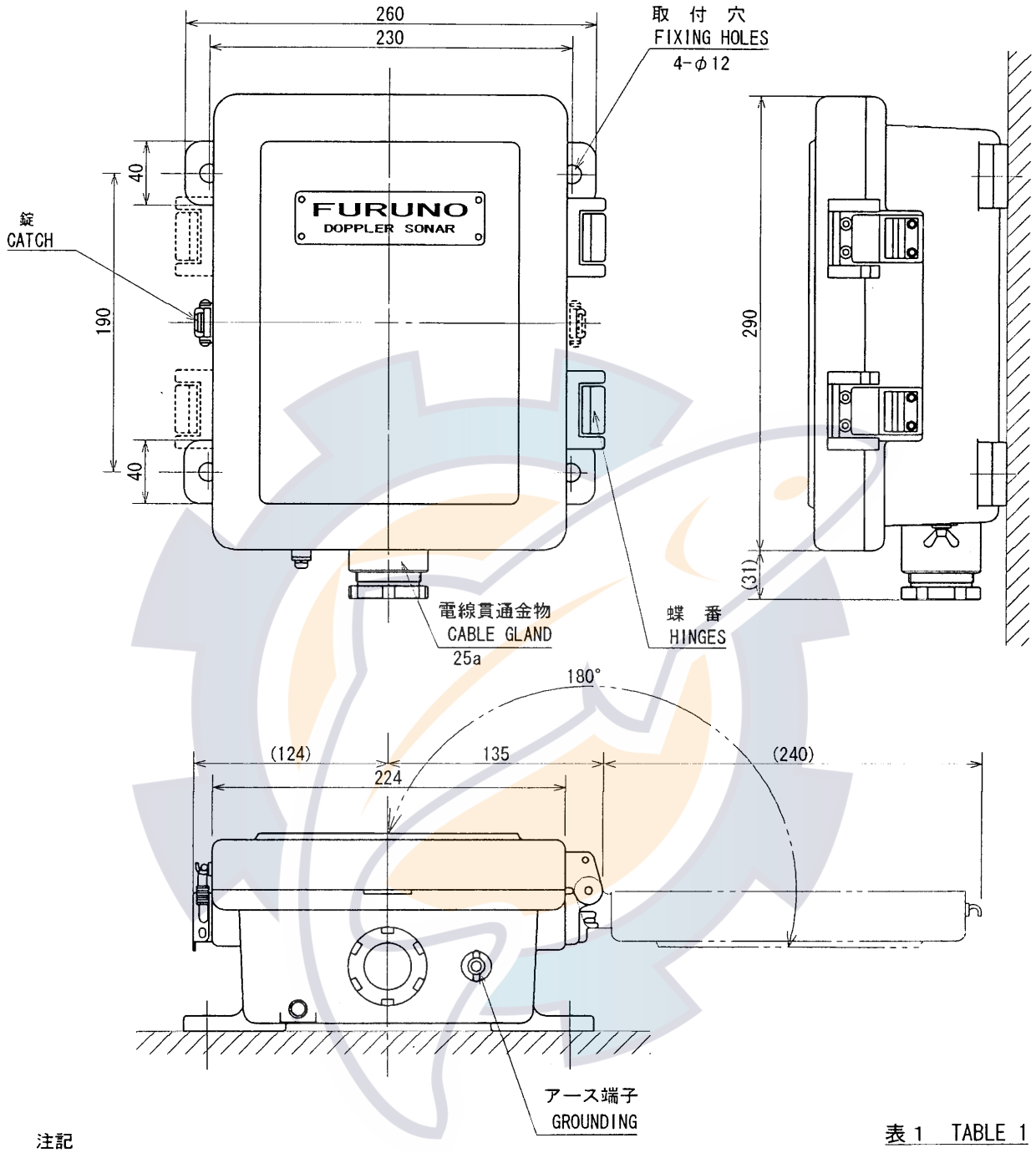

注記

1）指定なき寸法公差は表１による。
2）錠と蝶番の取付位置を入れ替えることで、右開きの扉を左開きに変更できます。
　また、蝶番を全て付属の錠に交換することで扉を取り外し型に変更可能。
3）ボルト固定部とアース端子接続部には防食対策(ｼｰﾙ剤塗布)が必要。

表１　TABLE 1

寸法区分(mm) DIMENSION	公差(mm) TOLERANCE
0 ＜ L ≦ 50	±1.5
50 ＜ L ≦ 100	±2.5
100 ＜ L ≦ 500	±3

NOTE

1. TABLE 1 INDICATES TOLERANCE OF DIMENSIONS.
2. THE OPENING DIRECTION OF THE LID CAN BE CHANGED BY INTERCHANGING THE POSITION OF HINGES AND CATCH. TO MAKE THE LID DETACHABLE, REPLACE HINGES WITH CATCHES SUPPLIED.
3. APPLY SILICONE SEALANT ARROUND FIXING BOLTS AND GROUNDING TERMINALS TO PREVENT RUSTING.

DRAWN Jul 26 '00 T.YAMASAKI		TITLE	DS-350
CHECKED Jul 29 '00 Y.K		名称	デジタル指示器（壁掛型）
APPROVED Jul 29 '00 Y.K			外寸図
SCALE 1/4 MASS 7 kg		NAME	DIGITAL INDICATOR (BULKHEAD TYPE)
DWG. No. C7236-G08-F			OUTLINE DRAWING

FURUNO ELECTRIC CO., LTD.

www.reelschematic.com

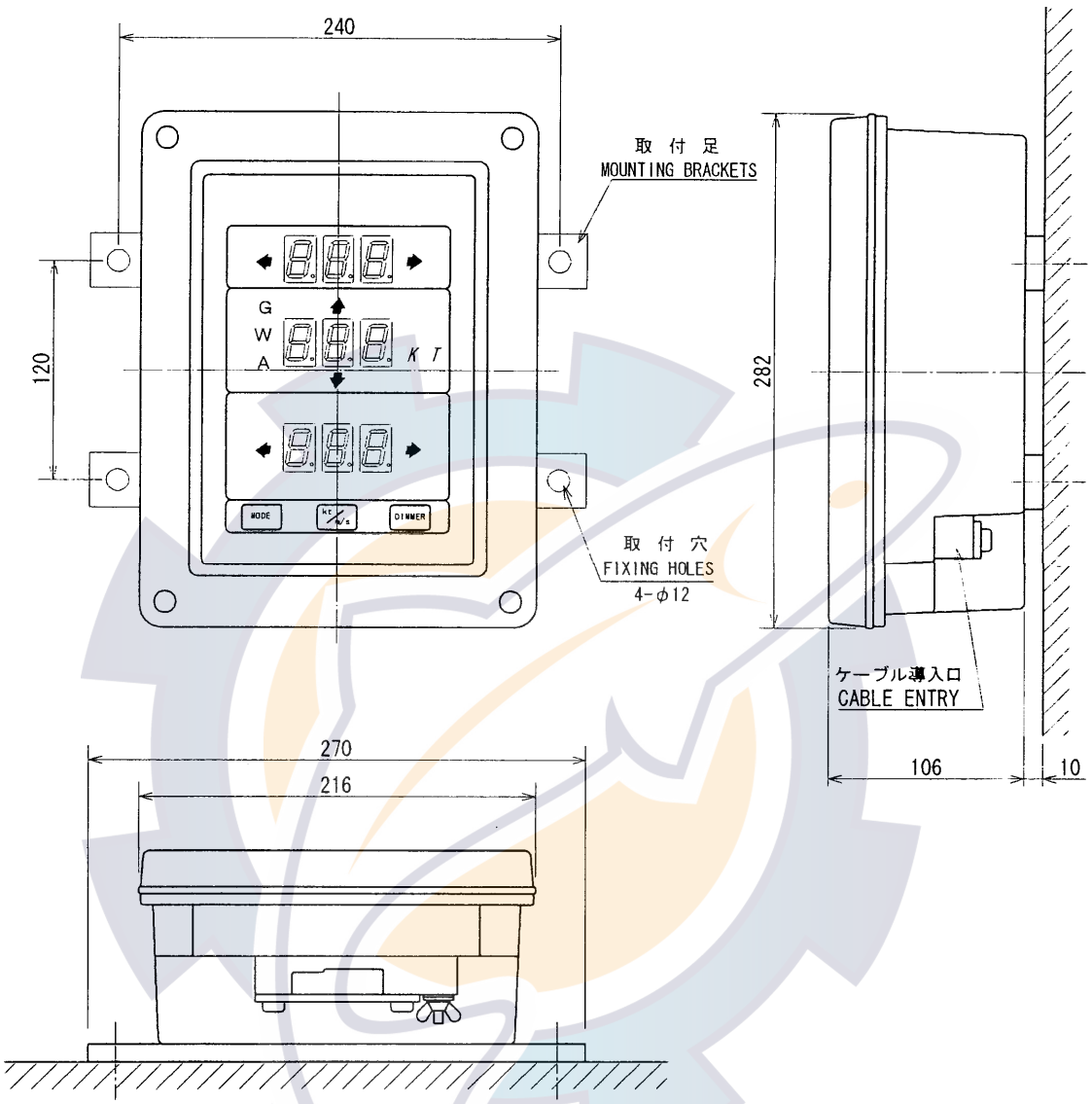

表 1　TABLE 1

寸法区分 (mm) DIMENSION	公差 (mm) TOLERANCE
0 ＜ L ≦ 50	±1.5
50 ＜ L ≦ 100	±2.5
100 ＜ L ≦ 500	±3

注記
1）指定なき寸法公差は表 1 による。
2）＃：推奨する最小サービス空間寸法。

NOTE
1. TABLE 1 INDICATES TOLERANCE OF DIMENSIONS.
2. #: RECOMMENDED SERVICE CLEARANCE DIMENSION.

DRAWN July 7 '00 T.YAMASAKI	TITLE	DS-351
CHECKED July 10 '00 T.Kuni	名称	デジタル指示器（壁掛型）
APPROVED July 10 '00 T.Kuni		外寸図
SCALE 1/4 MASS 4.4 kg	NAME	DIGITAL INDICATOR (BULKHEAD TYPE)
DWG. No. C7236-G17-C		OUTLINE DRAWING

FURUNO ELECTRIC CO., LTD.

www.reelschematic.com

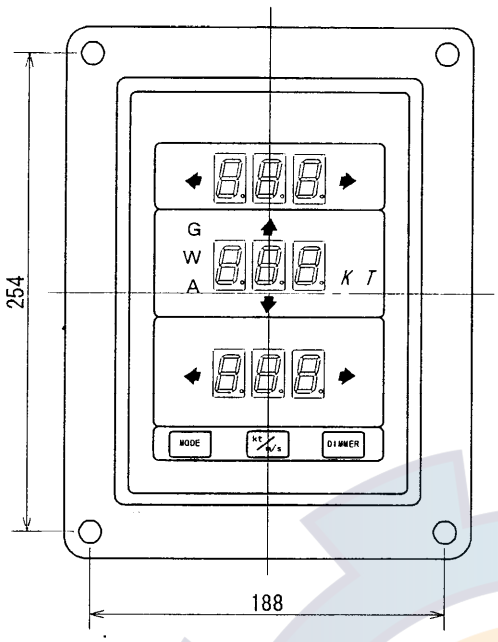

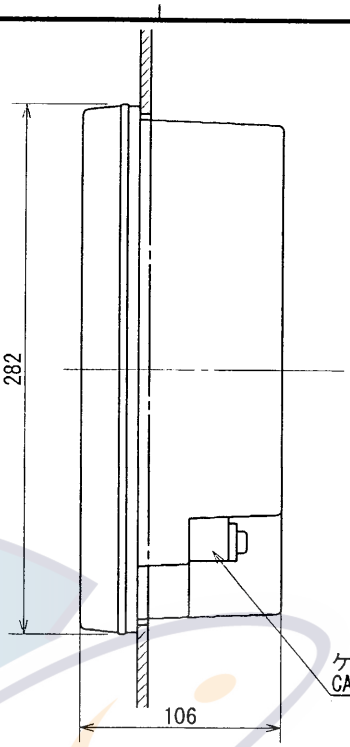

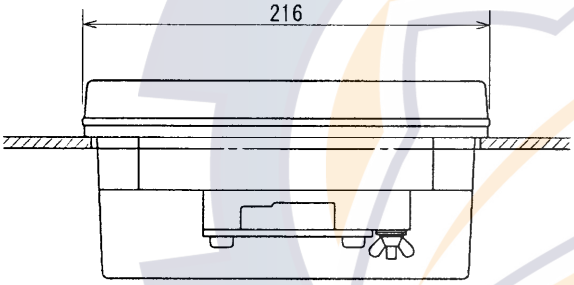

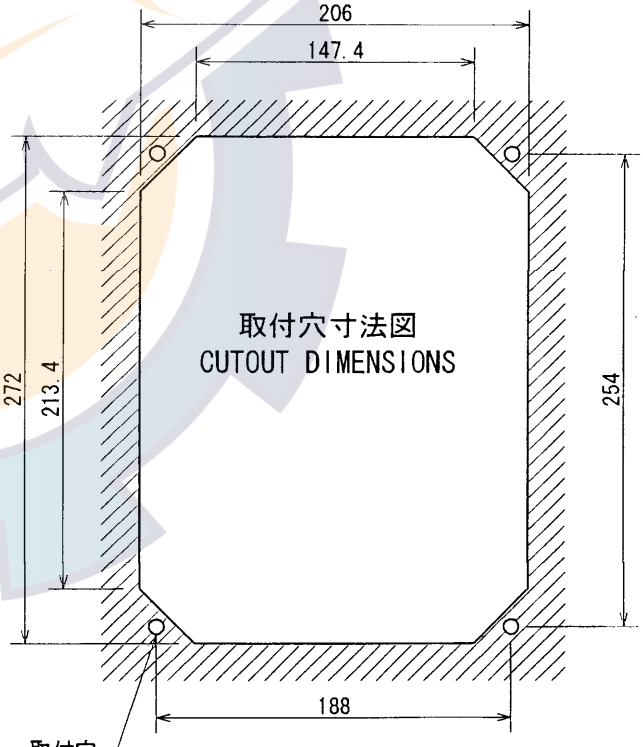

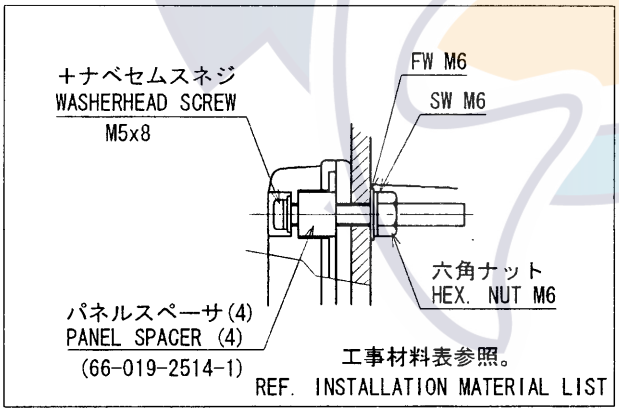

注記
1）指定なき寸法公差は表１による。
2）＃：推奨する最小サービス空間寸法。

NOTE
1. TABLE 1 INDICATES TOLERANCE OF DIMENSIONS.
2. #: RECOMMENDED SERVICE CLEARANCE DIMENSION.

表１ TABLE 1

寸法区分(mm) DIMENSION	公差(mm) TOLERANCE
0 ＜ L ≦ 50	±1.5
50 ＜ L ≦ 100	±2.5
100 ＜ L ≦ 500	±3

DRAWN	July 12'00 T.YAMASAKI	TITLE	DS-351
CHECKED	July 13'00 T.K	名称	デジタル指示器（埋込型）
APPROVED	July 13'00 T.K		外寸図
SCALE	1/4	MASS	4 kg
DWG. No.	C7236-G20- C	NAME	DIGITAL INDICATOR (FLUSH MOUNT)
			OUTLINE DRAWING

FURUNO ELECTRIC CO., LTD.

www.reelschematic.com

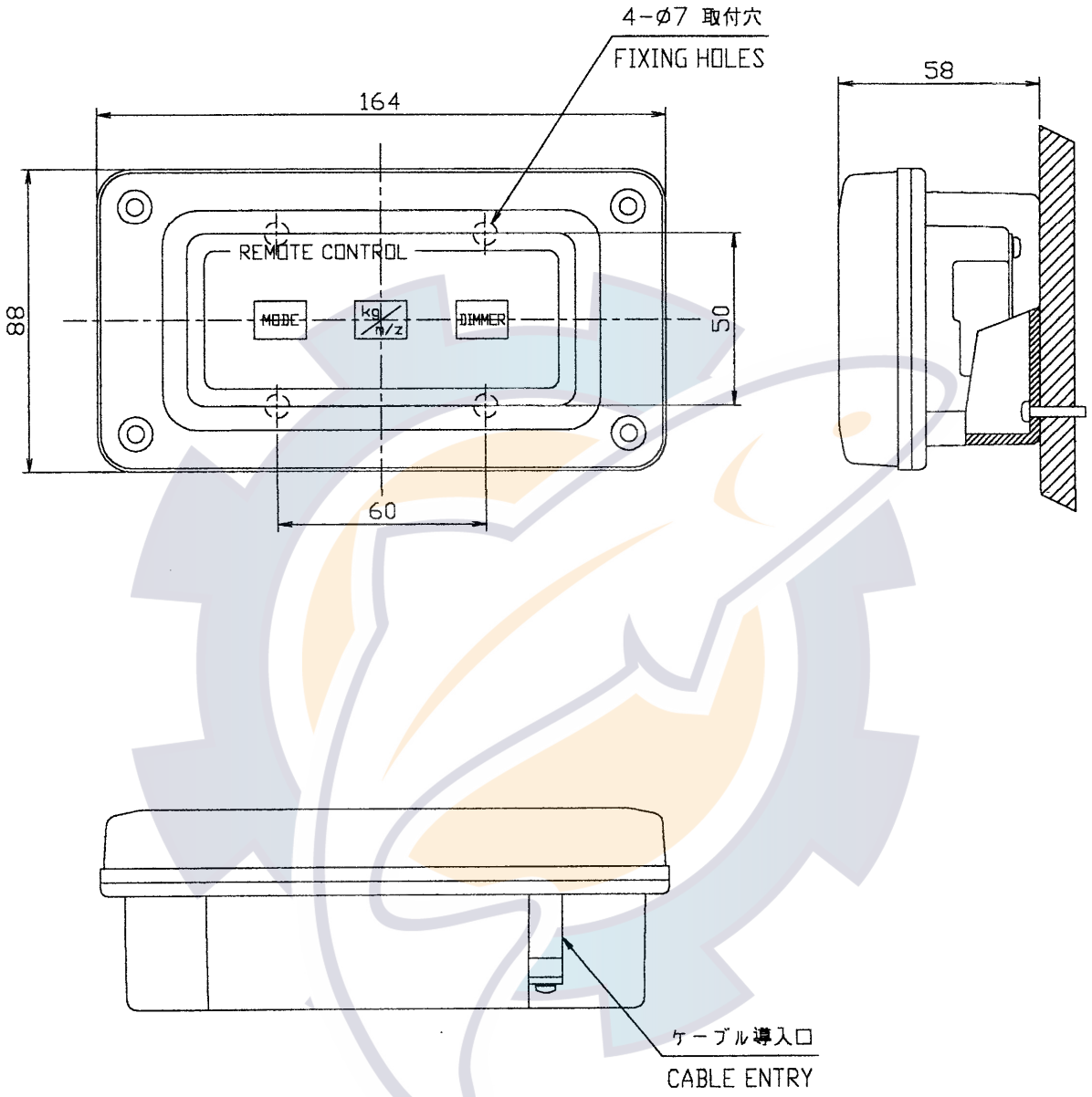

品番 ITEM	品名 NAME	材質 MATERIAL	数量 Q'TY	図番 DWG.NO.	摘要 REMARKS

DRAWN Jun. 27 '01 T.YAMASAKI	TITLE DS-359
CHECKED Jun. 27 '01 Y.KIMURA	名称 リモート箱（壁掛型）
APPROVED Jun. 27 '01 Y.KIMURA	外寸図
SCALE 1/2 MASS 0.7 ±10% kg	NAME REMOTE BOX (BULKHEAD MOUNT TYPE)
DWG.No. C7236-G16-C	OUTLINE DRAWING

FURUNO ELECTRIC CO., LTD.

www.reelschematic.com

表1 TABLE 1

寸法区分(mm) DIMENSION	公差(mm) TOLERANCE
L ≦ 50	±1.5
50 < L ≦ 100	±2.5
100 < L ≦ 500	±3

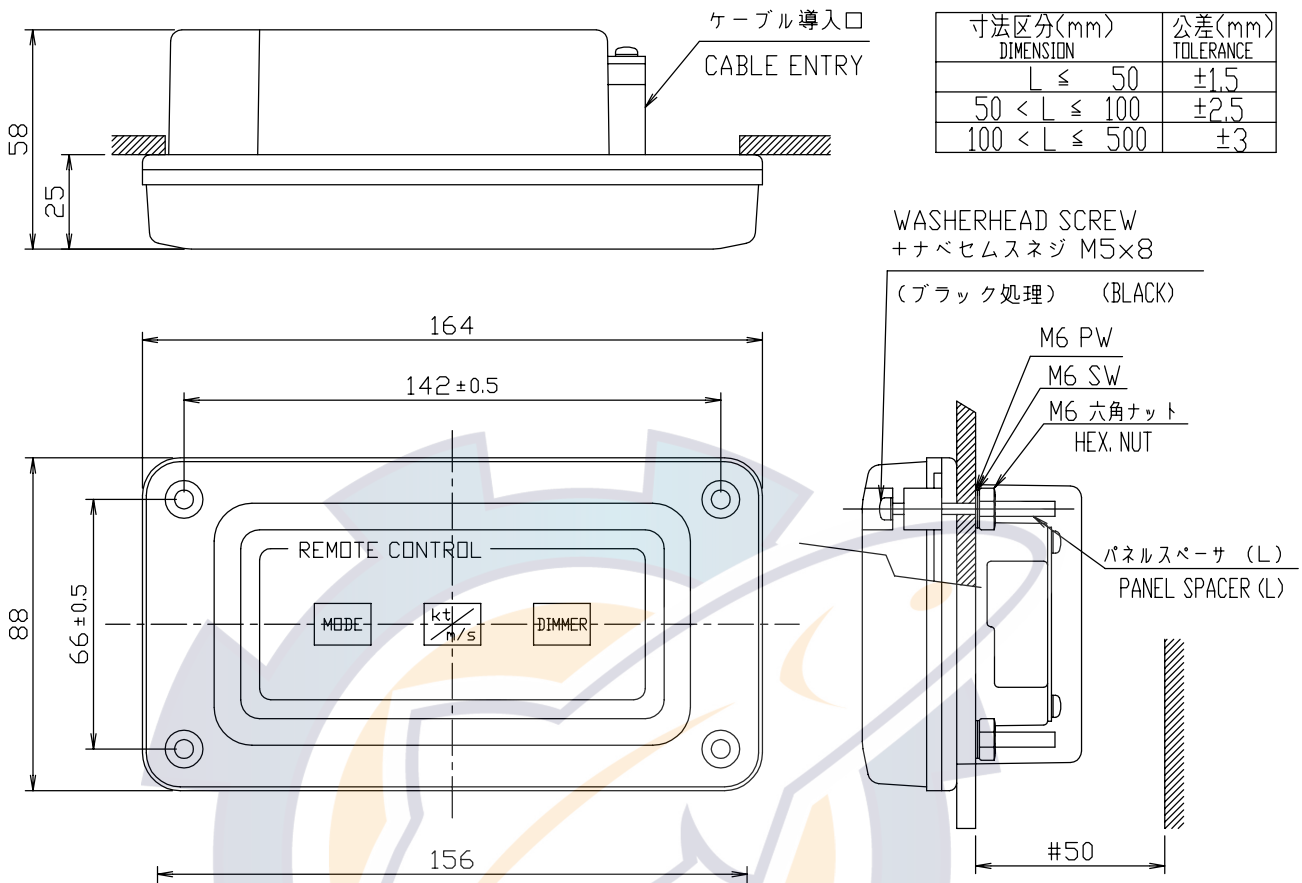

取付穴寸法
CUTOUT DIMENSIONS

注記
1）指定なき寸法公差は表1による。
2）＃印寸法は最小サービス空間寸法を示す。

NOTE
1. TABLE 1 INDICATES TOLERANCE OF DIMENSIONS WHICH IS NOT SPECIFIED.
2. #: MINIMUM SERVICE CLEARANCE.

DRAWN Feb. 9 '04 T.YAMASAKI		TITLE	DS-359
CHECKED Feb. 9 '04 T.TAKENO		名称	リモート箱（埋込装備）
APPROVED Feb.12' 04 H.HAYASHI	DS-30		外寸図
SCALE 1/2	MASS 0.7 ±10% kg	NAME	REMOTE BOX (FLUSH MOUNT)
DWG.No. C7236-G15- F			OUTLINE DRAWING

FURUNO ELECTRIC CO., LTD.

www.reelschematic.com

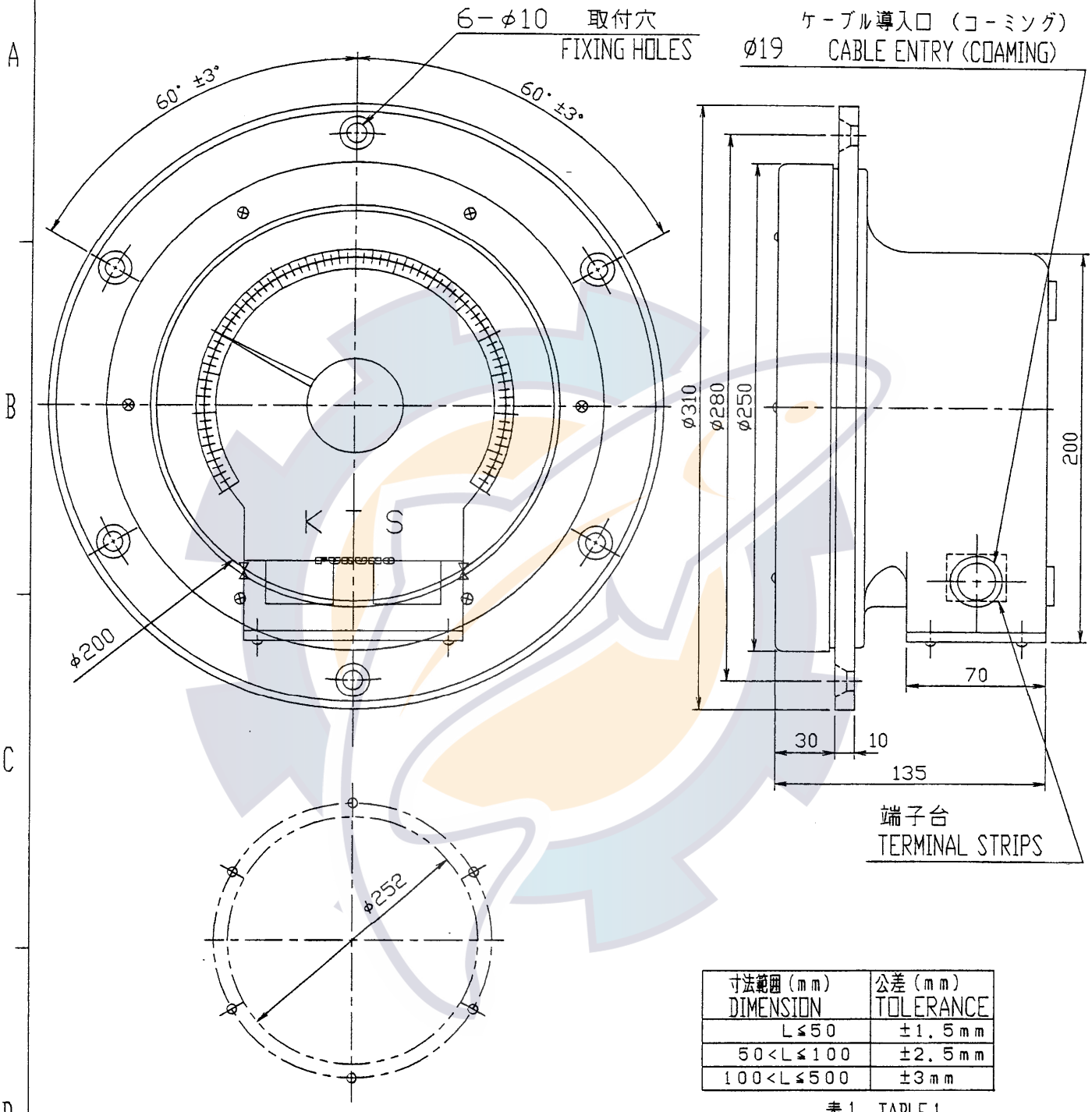

取付穴寸法
CUTOUT DIMENSION

寸法範囲（mm） DIMENSION	公差（mm） TOLERANCE
L≦50	±1.5mm
50<L≦100	±2.5mm
100<L≦500	±3mm

表1 TABLE 1

注記

1）指定なき寸法公差は表1による。

1. TABLE 1 INDICATES TOLERANCE OF DIMENSIONS.

DRAWN Aug. 28 '01 T. YAMASAKI			TITLE DS-381
CHECKED Aug. 28 '01 Y. KIMURA			名称 アナログ指示器（埋込型）
APPROVED Aug. 28 '01 Y. KIMURA			外寸図
SCALE 1/3	MASS 6.0 kg ±10%		NAME ANALOG INDICATOR (FLUSH MOUNT TYPE)
DWG.No. C7236-G19-D			OUTLINE DRAWING

FURUNO ELECTRIC CO., LTD.

www.radioschematic.com

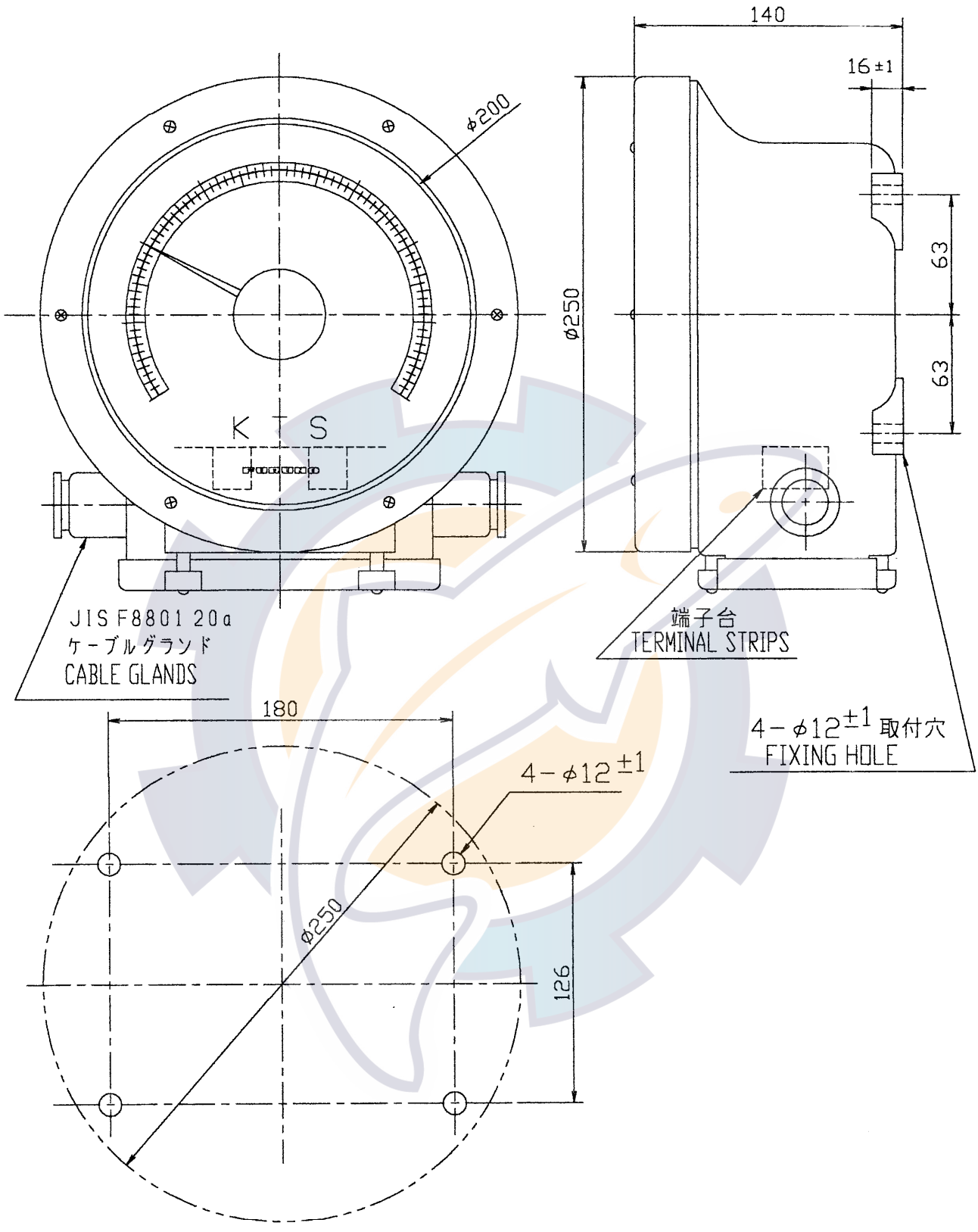

取付寸法図
FIXING DIMENSION

注 1：指定なき公差は1.5%
TOLERANCE IS1.5% UNLESS OTHERWISE SPECIFIED.

DRAWN Jun. 27' 01 T. YAMASAKI			TITLE DS-382
CHECKED Jun. 27' 01 Y. KIMURA			名称 アナログ指示器（壁掛型）
APPROVED Jun. 27' 01 Y. KIMURA			外寸図
SCALE 1/3	MASS ±10% 6.0 kg		NAME ANALOG INDICATOR (BULKHEAD MOUNT TYPE)
DWG.No. C7236-G18-C			OUTLINE DRAWING

FURUNO ELECTRIC CO., LTD.

www.freeschematic.com

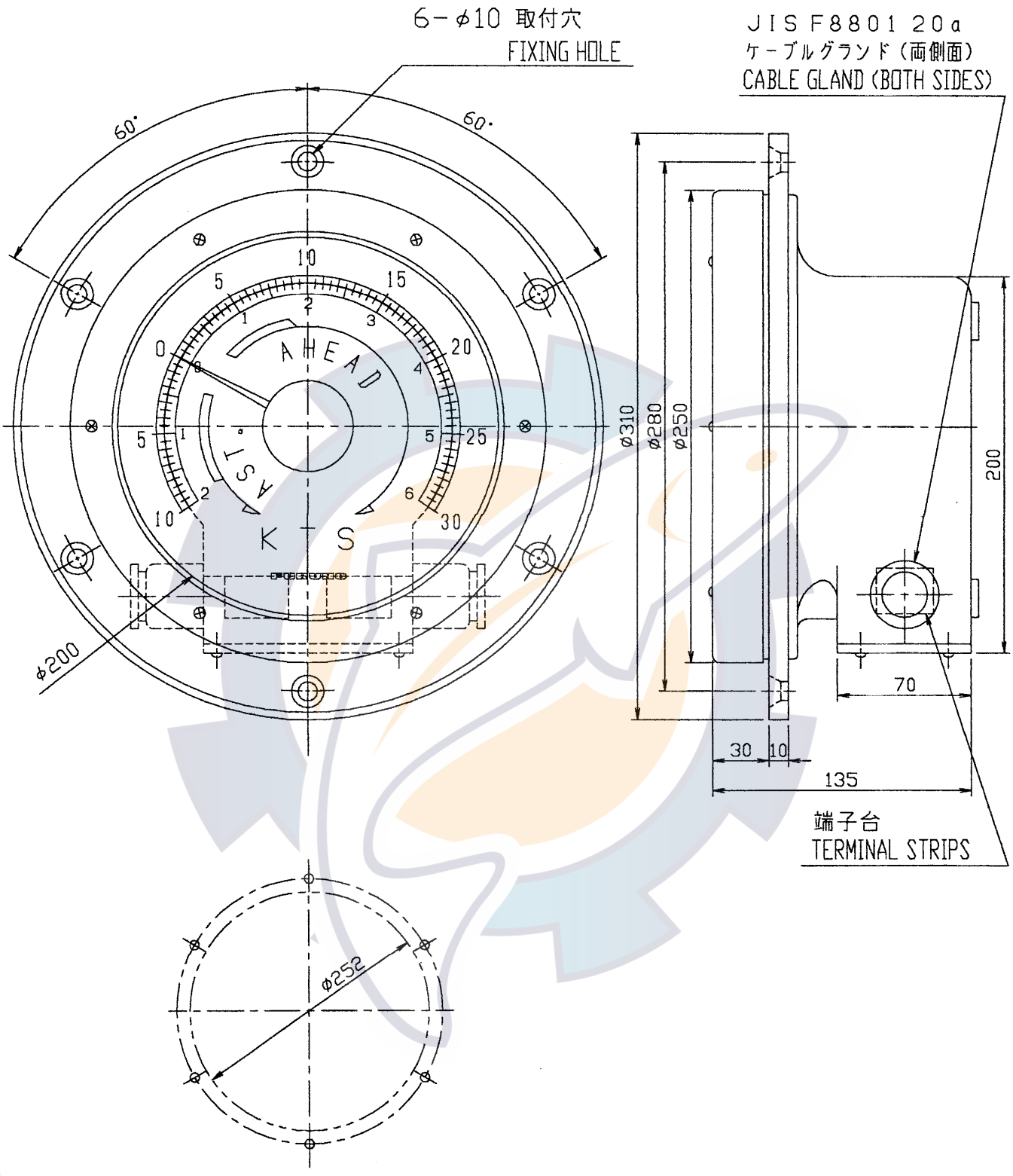

DRAWN Jun. 27' 01 T. YAMASAKI			TITLE MF－22A－1
CHECKED Jun. 27' 01 Y. KIMURA			名称 アナログ指示器（埋込型）
APPROVED Jun. 27' 01 Y. KIMURA			外寸図
SCALE 1/3	MASS 6.4 ±10% kg		NAME ANALOGUE DISPLAY UNIT (FLUSH MOUNT)
DWG.No. C7213-009-C			OUTLINE DRAWING

FURUNO ELECTRIC CO., LTD.

www.reelschematic.com

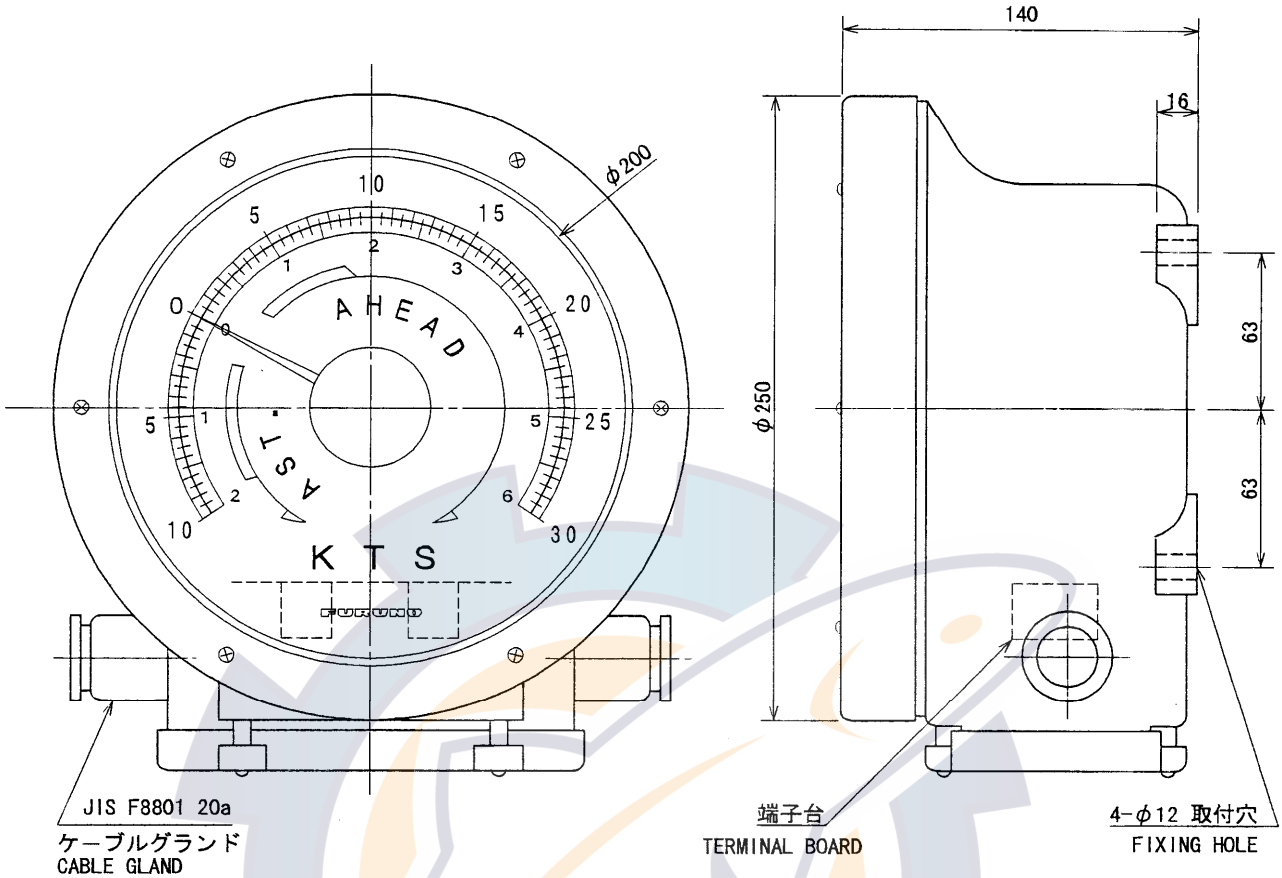

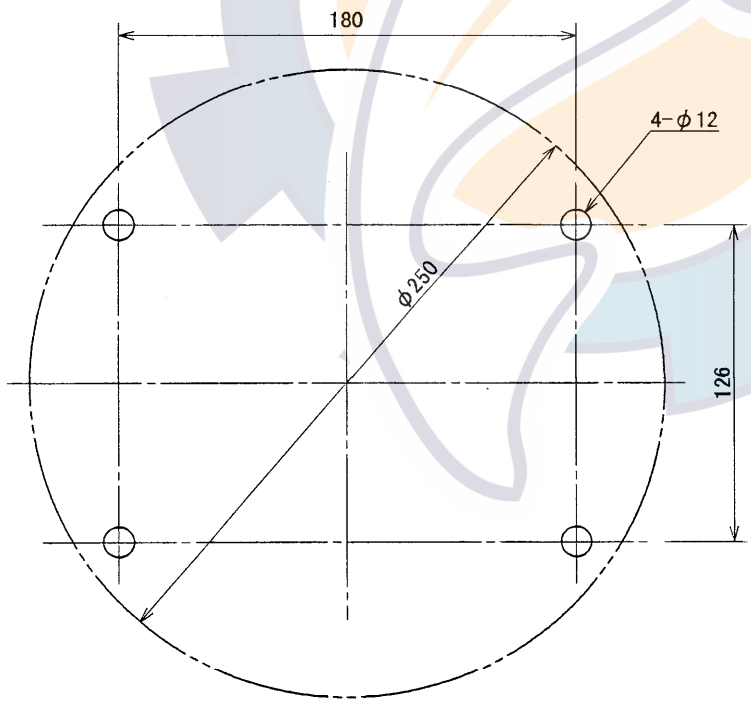

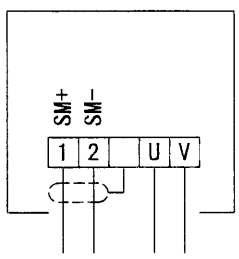

取付寸法図

MOUNTING DIMENSION

DRAWN Feb. 9 '01 T. YAMASAKI		TITLE	MF-22A-2
CHECKED Feb.9 '01 Y. Kim		名称	アナログ指示器（壁掛型）
APPROVED Feb9 '01 Y. Kim			外寸図
SCALE 1/3	MASS 6 kg ±10%	NAME	ANALOGUE DISPLAY UNIT (BULKHEAD MOUNT)
DWG. No. C7213-010- B			OUTLINE DRAWING

FURUNO ELECTRIC CO., LTD.

www.freeschematic.com

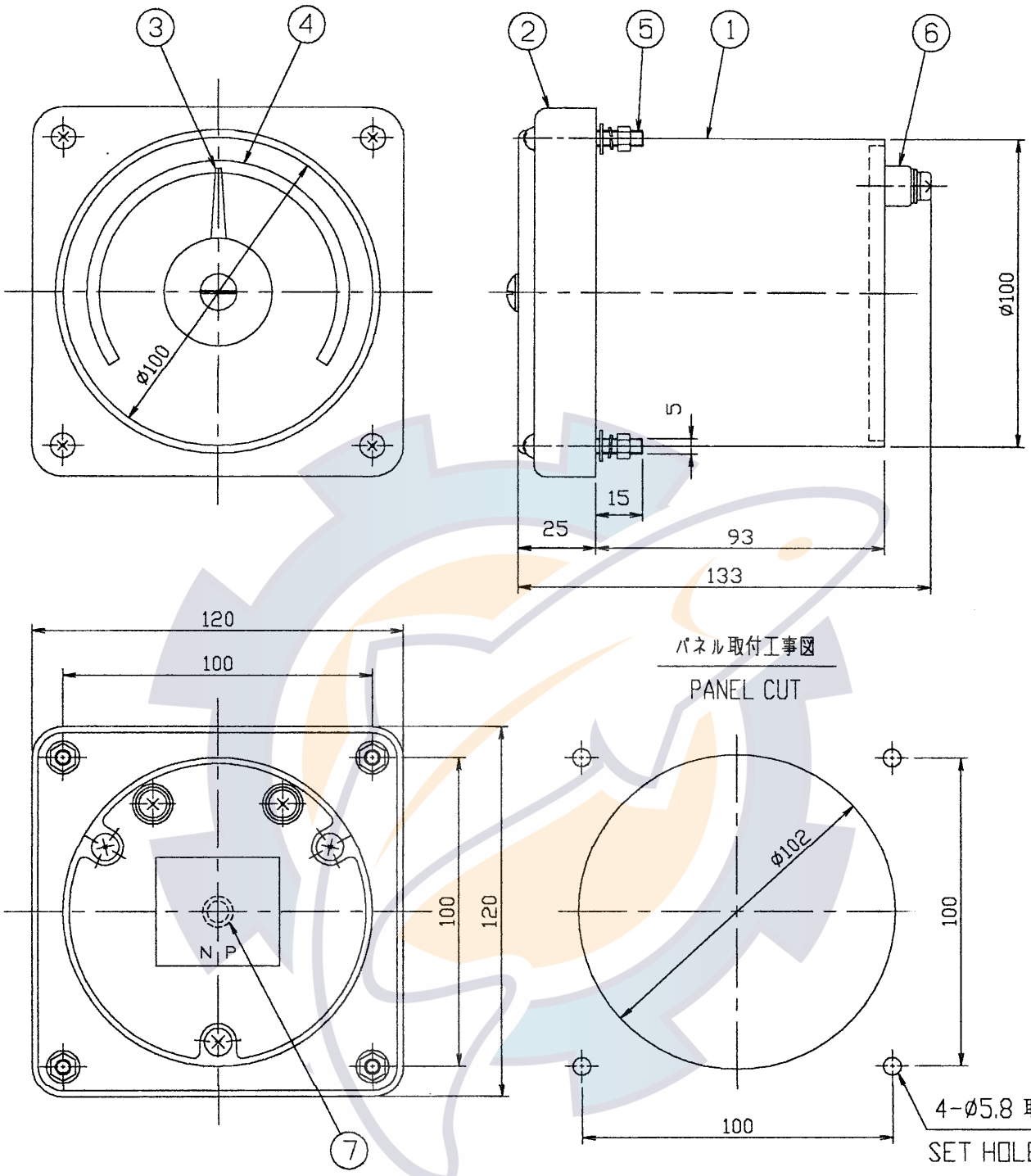

PARTICULARS (特性)	
TYPE (型式)	MOVING COIL (可動線輪型)
VOLTAGE (電圧)	1V
CURRENT (特性)	10mA

ITEM 品番	NAME 品名	MATERIAL 材質	Q'TY 数量	DWG. NO. 図番	REMARKS 摘要
7	調整器 ADJUSTOR	———	1		
6	端子 TERMINAL	———	2		
5	取付ネジ SET SCREW	BSBW2 BRASS BAR	4		
4	目盛板 DIAL	合成樹脂 SHEET RESIN	1		
3	指針 POINTER	A3P2 ALUMINUM PLATE	1		
2	フタ COVER	合成樹脂 SHEET RESIN	1		
1	本体 BODY	合成樹脂 SHEET RESIN	1		

DRAWN Jun. 27' 01 T. YAMASAKI	TITLE	MF-22A-3
CHECKED Jun. 27' 01 Y. KIMURA	名称	アナログ指示器（パネル埋込型）
APPROVED Jun. 27' 01 Y. KIMURA		外寸図
SCALE 1/2 MASS ±10% 1.3 kg	NAME	ANALOGUE DISPLAY UNIT (FLUSH MOUNT)
DWG.No. C7213-079-E		OUTLINE DRAWING

FURUNO ELECTRIC CO., LTD.

www.freeschematic.com

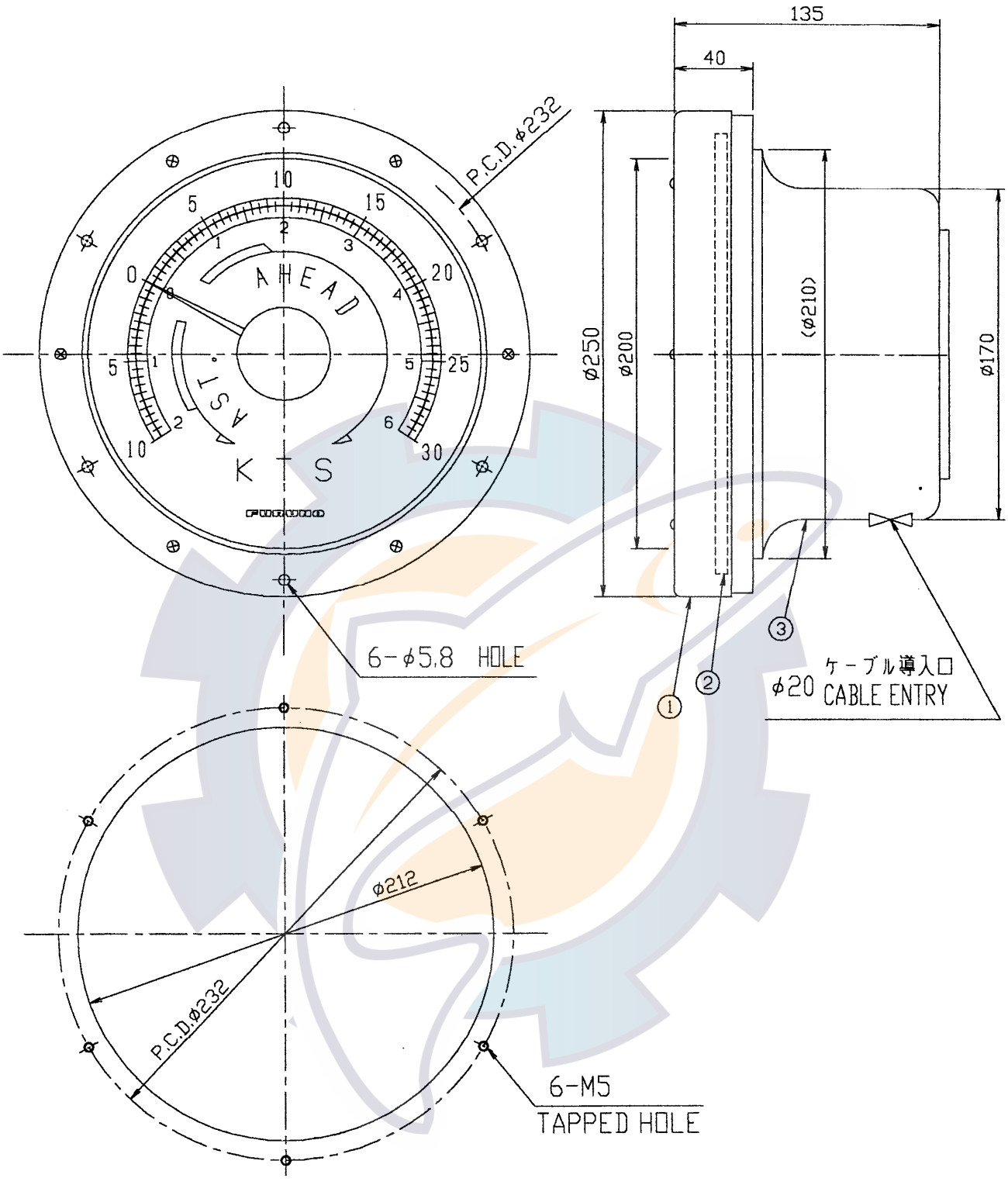

取付寸法図
FIXING DIMENSION

ITEM 品番	NAME 品名	MATERIAL 材質	Q'TY 数量	DWG. NO. 図番	REMARKS 摘要
3	本体 BODY	AC7AF	1		
2	E.L.板 E.L. PLATE		1		
1	フタ COVER	AC7AF	1		

DRAWN Jun. 27' 01 T. YAMASAKI		TITLE	MF-22A-4
CHECKED Jun. 27' 01 Y. KIMURA		名称	アナログ指示器（埋込型）
APPROVED Jun. 27' 01 Y. KIMURA			外寸図
SCALE 1/3	MASS ±10% 4.4 kg	NAME	ANALOGUE DISPLAY UNIT (FLUSH MOUNT)
DWG.No. C7213-096-D			OUTLINE DRAWING

FURUNO ELECTRIC CO., LTD.

www.reelschematic.com

FURUNO

D-24

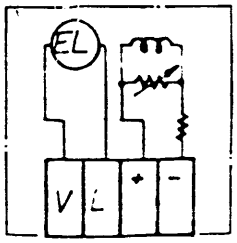

NO	NAME OF PARTS(名称)	NO REQ.	MATERIAL(材質)		REMARKS(備考)
01	DIAL (目盛板)	1	SHEET RESIN	—	
02	POINTER (指針)	1	ALUMINUM PLATE	A3P2	
03	ELPLATE (E.L 板)	1	—	—	
04	METER ELEMENT(メーター)	1	—	—	
05	BLIND COVER(面フタ)	1	ALUMINUM PLATE	A3P2	
06	BASE (ベース)	1	SHEET RESIN	—	
07	SET PLATE(取付板)	1	ALUMINUM ALLOY CASTING.	AC7AF	
08	RESISTOR (補償線輪)	2	—	—	
09	— DO. — (〃)	1	—	—	
10	COVER (カバー)	1	ALUMINUM ALLOY CASTING.	AC7AF	

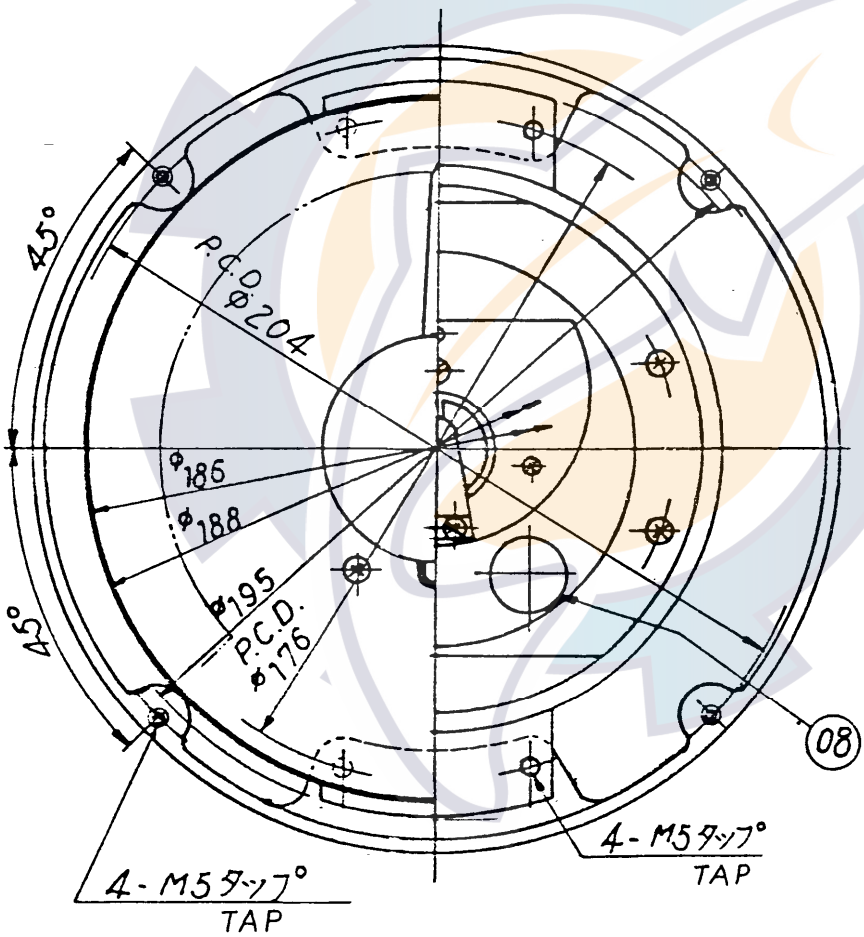

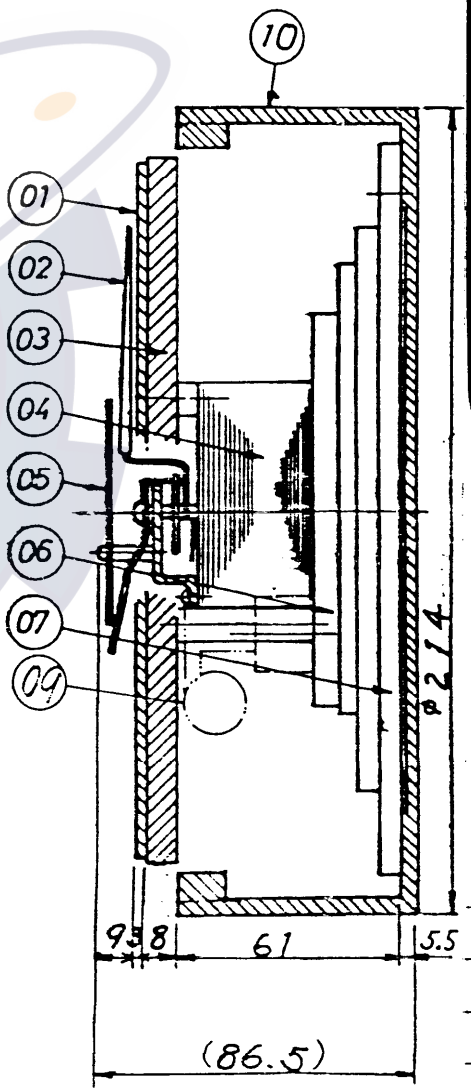

品番 ITEM	品名 NAME	材質 MATERIAL	数量 Q'TY	図番 DWG.NO.	摘要 REMARKS

承認 APPROVED	・ ・	三角法 THIRD ANGLE PROJECTION		名称 TITLE	MF-22A-5 アナログ指示器外観図 ANALOG DISPLAY UNIT
検図 CHECKED	・ ・	尺度 SCALE	1/2		
製図 DRAWN	Jan. 24. '80 K. Kobayashi	重量 WEIGHT	2.8 kg	図番 DWG.NO.	C7213-036-E(4KI-20297-5)

FURUNO ELECTRIC CO., LTD.

www.freeschematic.com

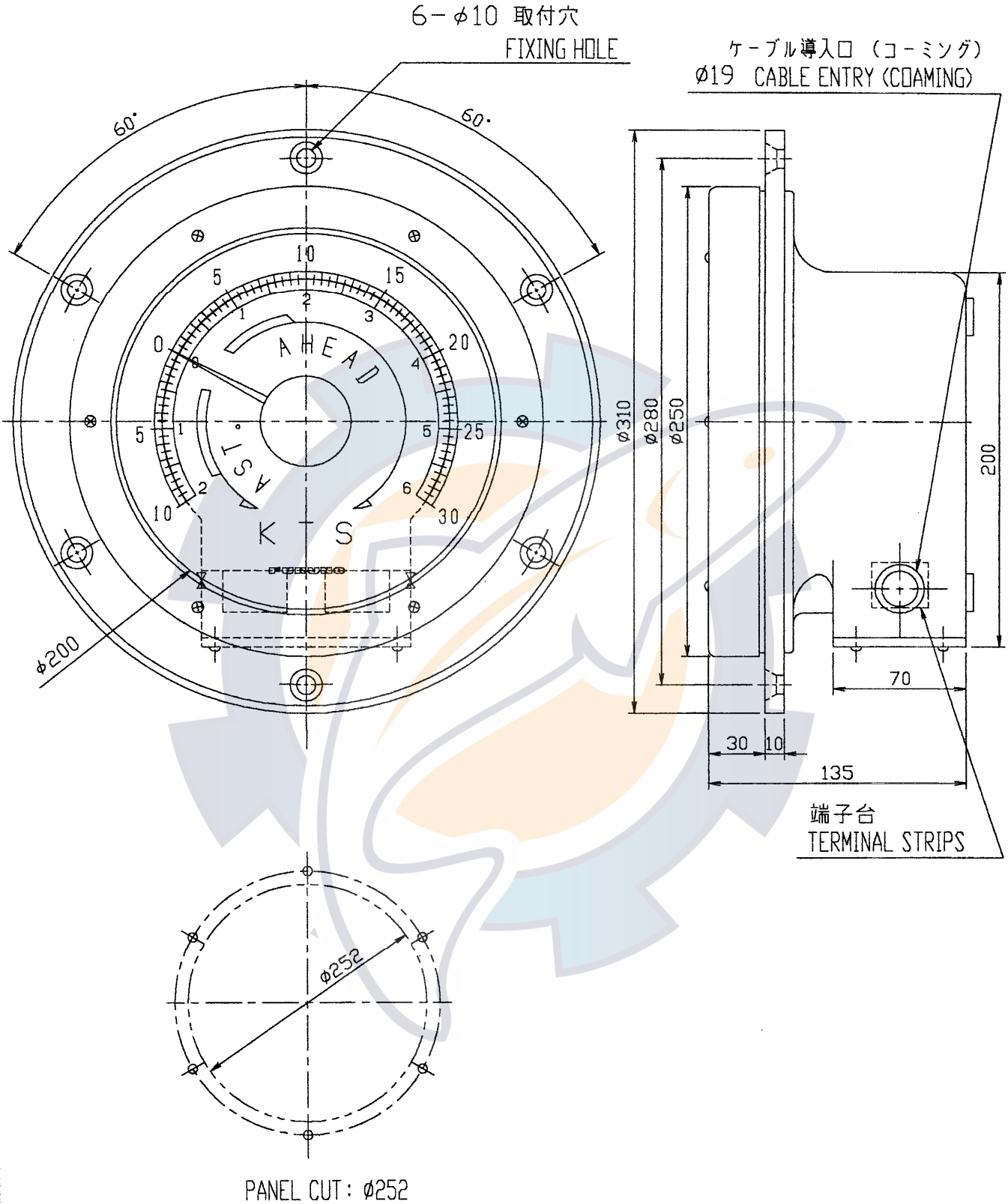

DRAWN Jun. 27' 01 T. YAMASAKI			TITLE MF－22A－6
CHECKED Jun. 27' 01 Y. KIMURA			名称 アナログ指示器（埋込型）
APPROVED Jun. 27' 01 Y. KIMURA			外寸図
SCALE 1/3	MASS 6.0 ±10% kg		NAME ANALOGUE DISPLAY UNIT (FLUSH MOUNT)
DWG.No. C7213－111－C			OUTLINE DRAWING

FURUNO ELECTRIC CO., LTD.

www.reelschematic.com

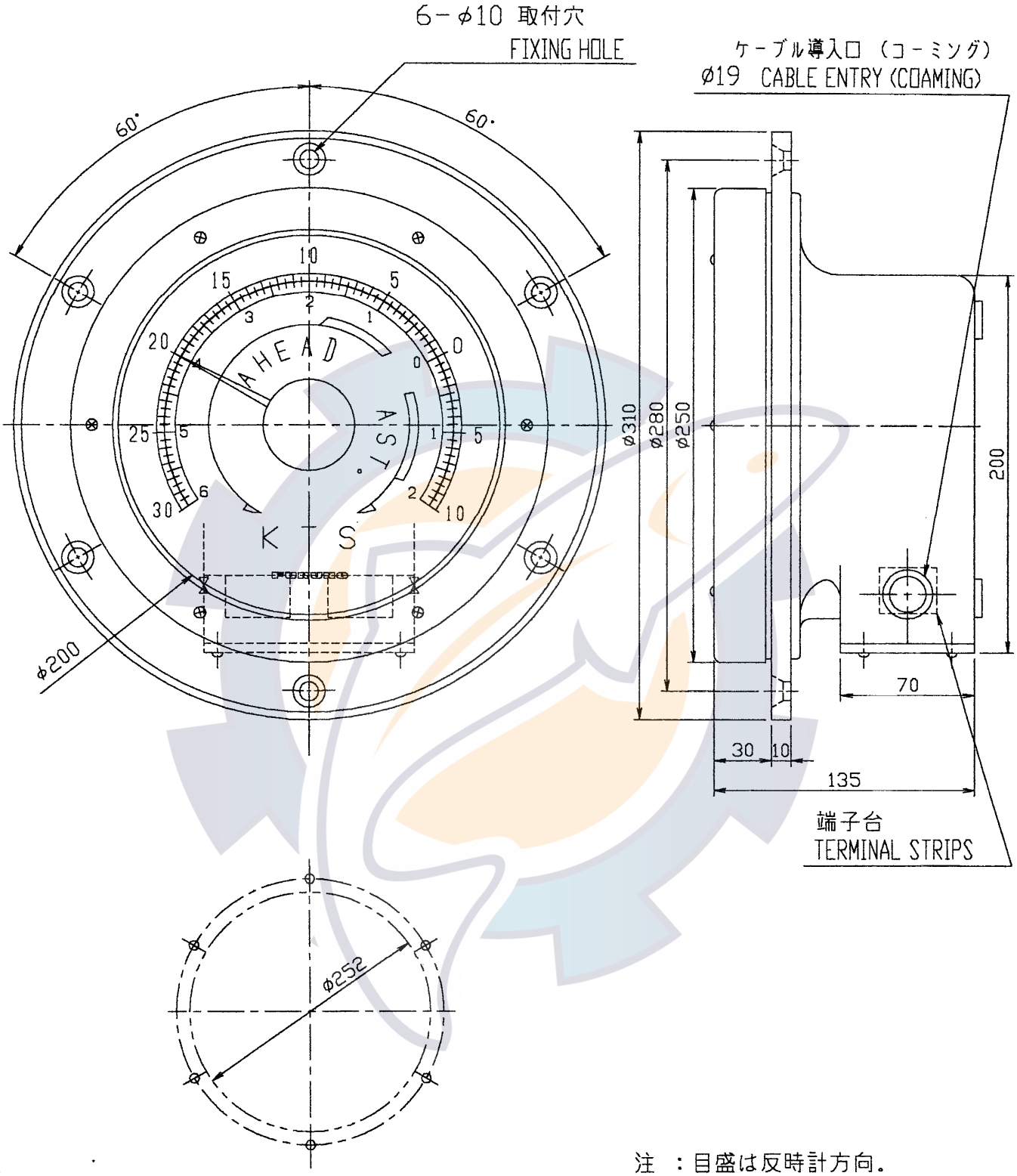

注 ：目盛は反時計方向。
NOTE: DIRCTION OF SCALE IS CCW.

DRAWN Jun. 27' 01 T. YAMASAKI			TITLE MF－22A－7
CHECKED Jun. 27' 01 Y. KIMURA			名称 アナログ指示器（埋込型）
APPROVED Jun. 27' 01 Y. KIMURA			外寸図
SCALE 1/3	MASS 6.0 ±10% kg		NAME ANALOGUE DISPLAY UNIT (FLUSH MOUNT)
DWG.No. C7213-120-E			OUTLINE DRAWING

FURUNO ELECTRIC CO., LTD.

www.freeschematic.com

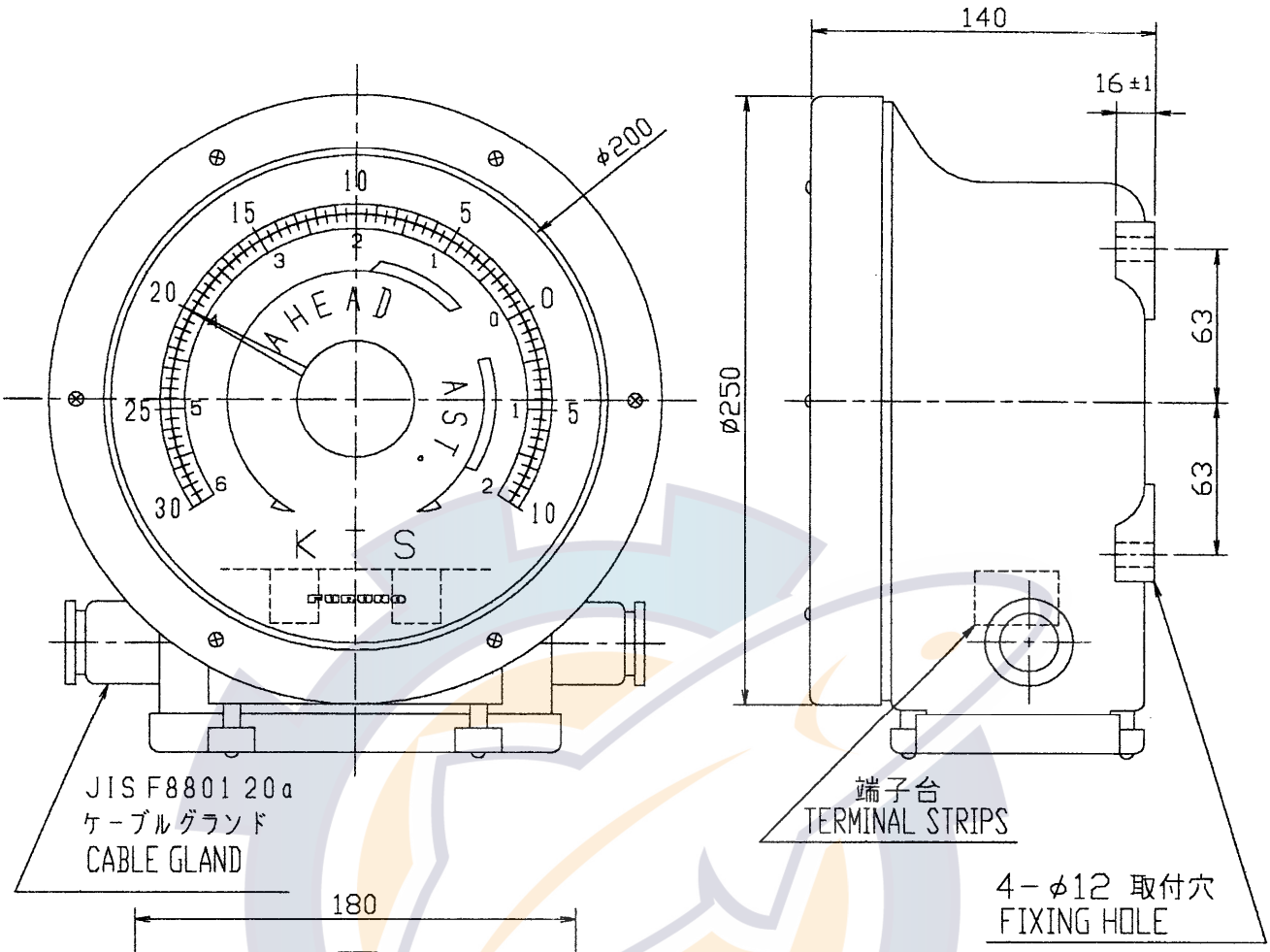

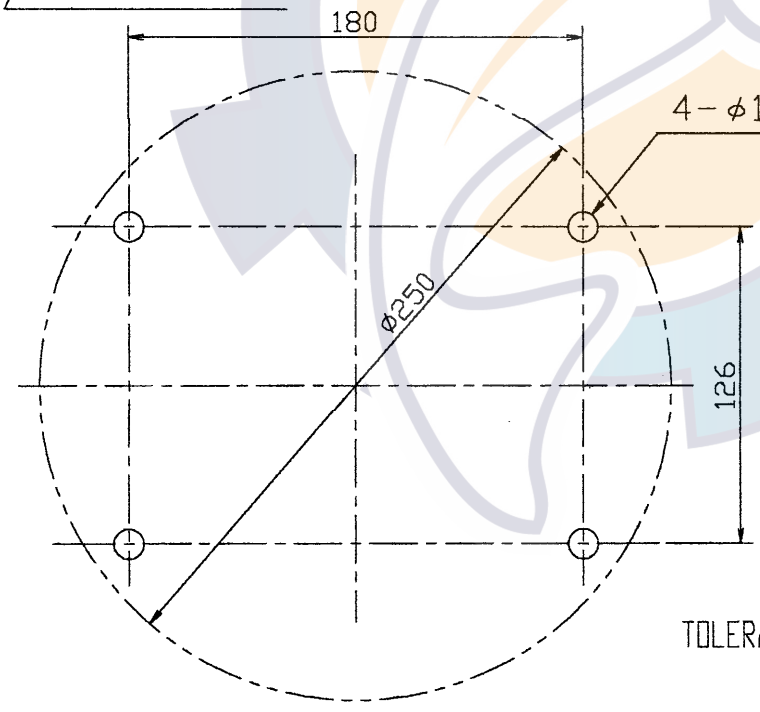

取付寸法図
FIXING DIMENSION

注 1：指定なき公差は1．5％
TOLERANCE IS1.5% UNLESS OTHERWISE SPECIFIED.
注 2：目盛は反時計方向
NOTE 2: DIRCTION OF SCALE IS CCW.

DRAWN Jun. 27' 01 T. YAMASAKI			TITLE MF−22A−8
CHECKED Jun. 27' 01 Y. KIMURA			名称 アナログ指示器（壁掛型）
APPROVED Jun. 27' 01 Y. KIMURA			外寸図
SCALE 1/3	MASS ±10% 6.0 kg		NAME ANALOGUE DISPLAY UNIT (BULKHEAD MOUNT)
DWG.No. C7213-133-C			OUTLINE DRAWING

FURUNO ELECTRIC CO., LTD.

www.reelschematic.com

壁掛型装備　BULKHEAD MOUNT

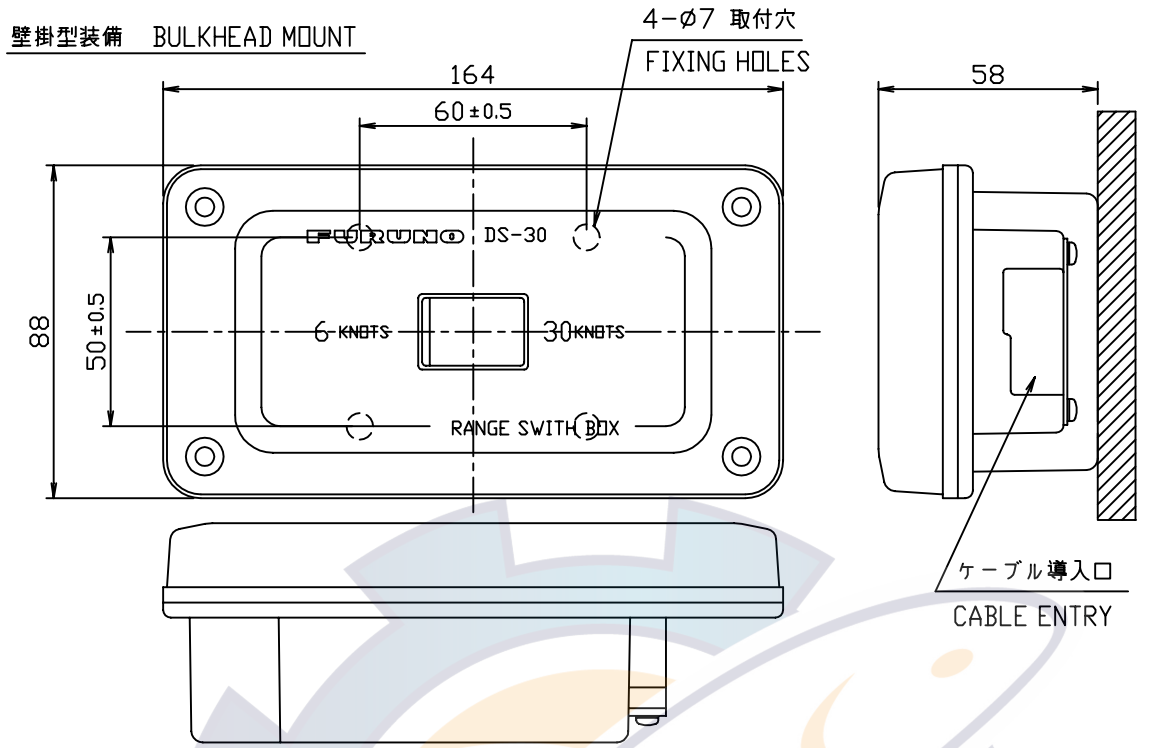

埋込型装備　FLUSH MOUNT

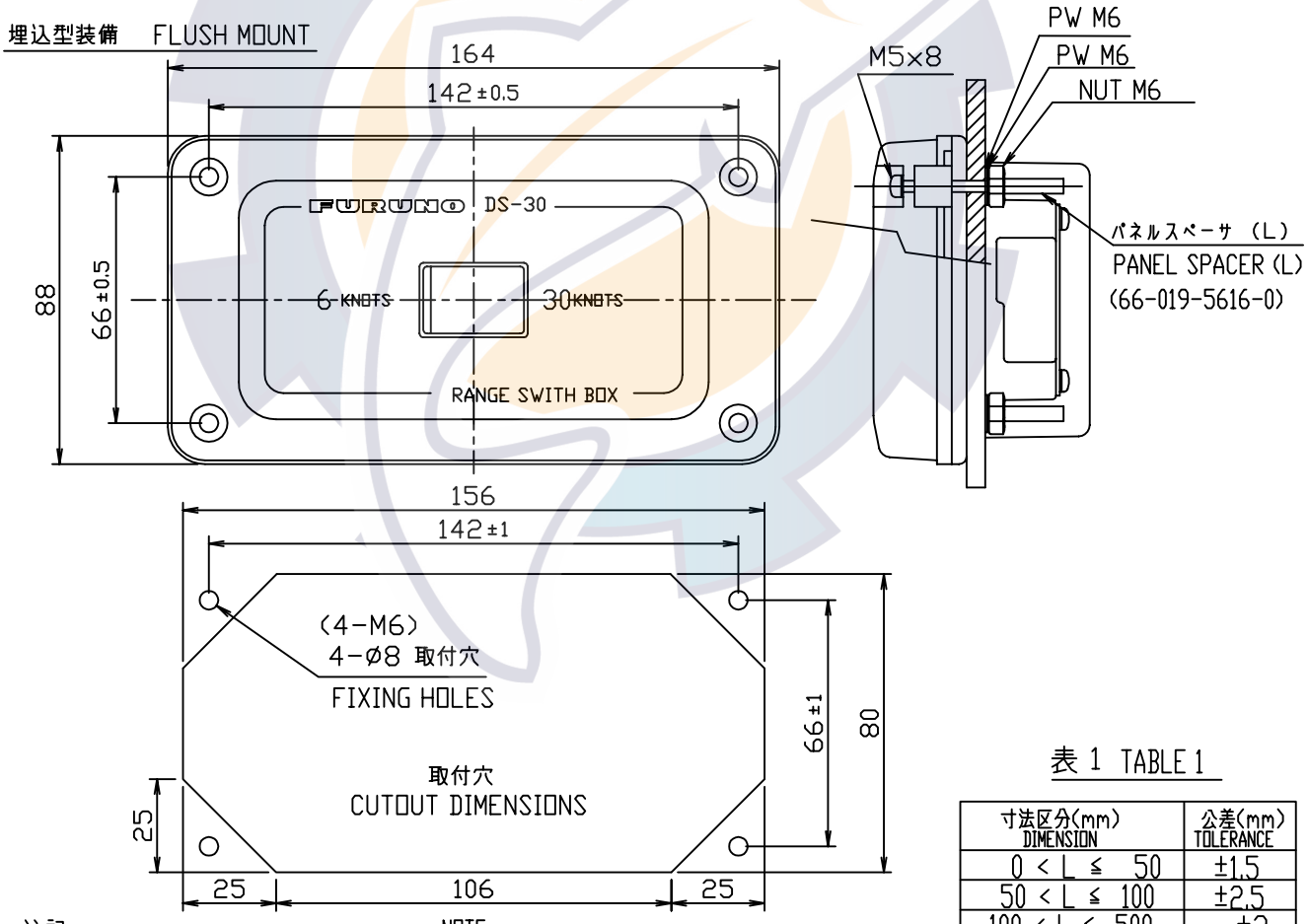

表 1　TABLE 1

寸法区分(mm) DIMENSION	公差(mm) TOLERANCE
0 < L ≤ 50	±1.5
50 < L ≤ 100	±2.5
100 < L ≤ 500	±3

注記

1）指定なき寸法公差は表 1 による。

NOTE

1. TABLE 1 INDICATES TOLERANCE OF DIMENSIONS WHICH IS NOT SPECIFIED.

DRAWN May 20 '04 T.YAMASAKI		TITLE DS-389
CHECKED May 20 '04 T.TAKENO		名称 レンジ切換器
APPROVED May 20 '04 T.Matsuguchi		外寸図
SCALE 1/2 MASS 0.7 ±10% kg		NAME RANGE SWITCH BOX
DWG.No. C7236-G22- D		OUTLINE DRAWING

FURUNO ELECTRIC CO., LTD.

www.radioschematic.com

※ 推奨サービス空間
RECOMMENDED SERVICE CLEARANCE

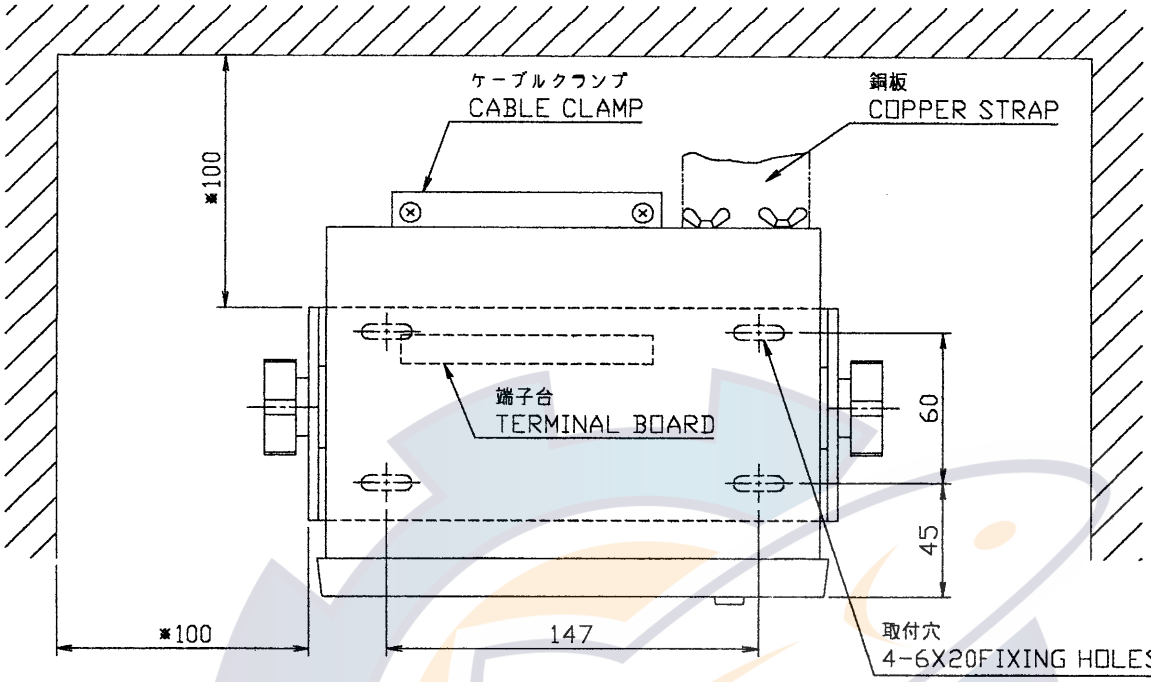

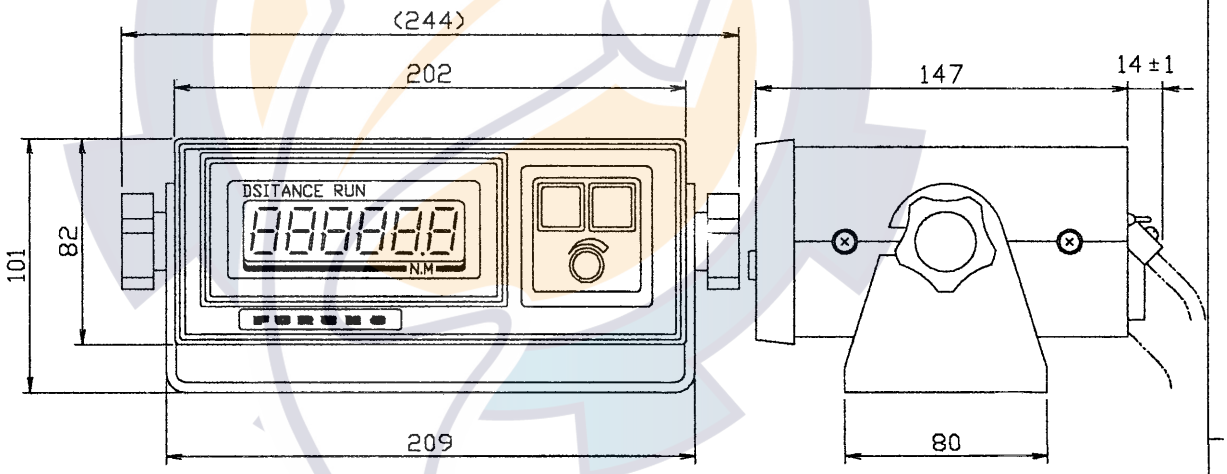

COMPASS SAFE DISTANCE
(DOT: UK)
STANDARD…… 1.5m
STEERING…… 0.6m

注：指定なき公差は１．５％
TOLERANCE IS 1.5% UNLESS OTHERWISE SPECIFIED

DRAWN Jun. 27 '01 T.YAMASAKI			TITLE DS-730
CHECKED Jun. 27 '01 Y.KIMURA			名称 航程計（卓上型）
APPROVED Jun. 27 '01 Y.KIMURA			外寸図
SCALE 1/3 MASS 1.7 ±10% kg			NAME DISTANCE INDICATOR(TABLE TOP MOUNT)
DWG.No. C7222-016-D			OUTLINE DRAWING

FURUNO ELECTRIC CO., LTD.

www.reelschematic.com

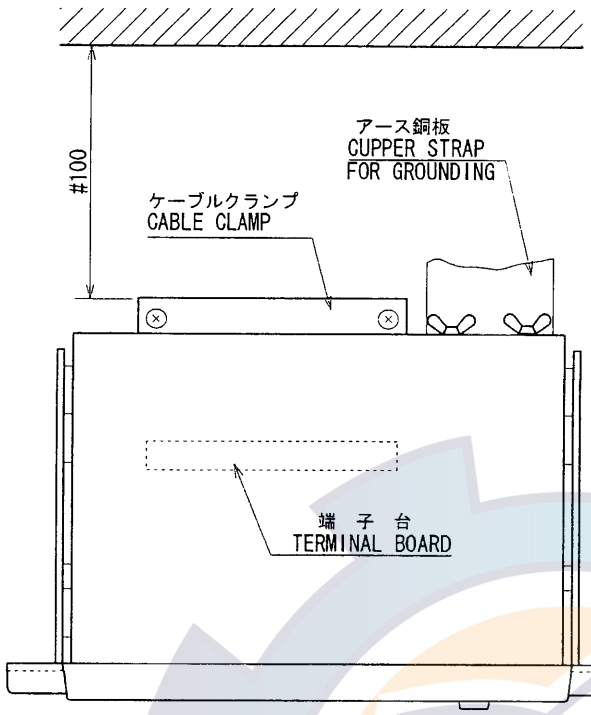

注記
1）指定なき寸法公差は表１による。
2）＃：推奨する最小サービス空間寸法。

NOTE
1. TABLE 1 INDICATES TOLERANCE OF DIMENSIONS.
2. #: RECOMMENDED SERVICE CLEARANCE DIMENSION.

表１ TABLE 1

寸法区分(mm) DIMENSION	公差(mm) TOLERANCE
0 ＜ L ≦ 50	±1.5
50 ＜ L ≦ 100	±2.5
100 ＜ L ≦ 500	±3
500 ＜ L ≦ 1000	±4

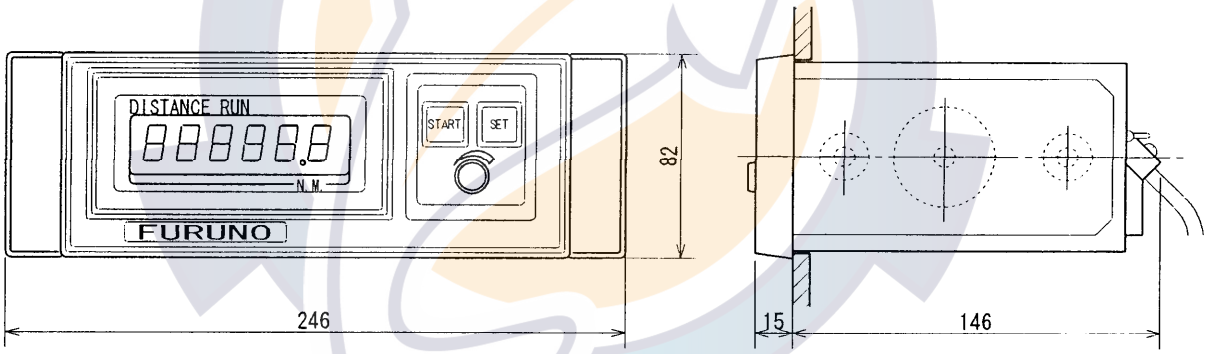

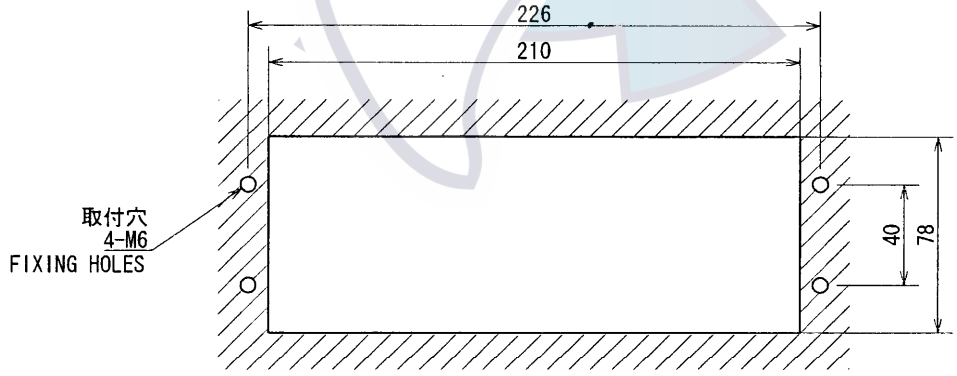

取 付 穴 寸 法
CUTOUT DIMENSIONS

DRAWN July 12'00 T.TAMASAKI			TITLE DS-730
CHECKED July 13'00 Y.K			名称 航程計（埋込型）
APPROVED July 13'00 Y.K			外寸図
SCALE 1/3	MASS 1.7 kg		NAME DISTANCE INDICATOR (FLUSH MOUNT)
DWG. No. C7222-015- D			OUTLINE DRAWING

FURUNO ELECTRIC CO., LTD.

www.reelschematic.com

FURUNO

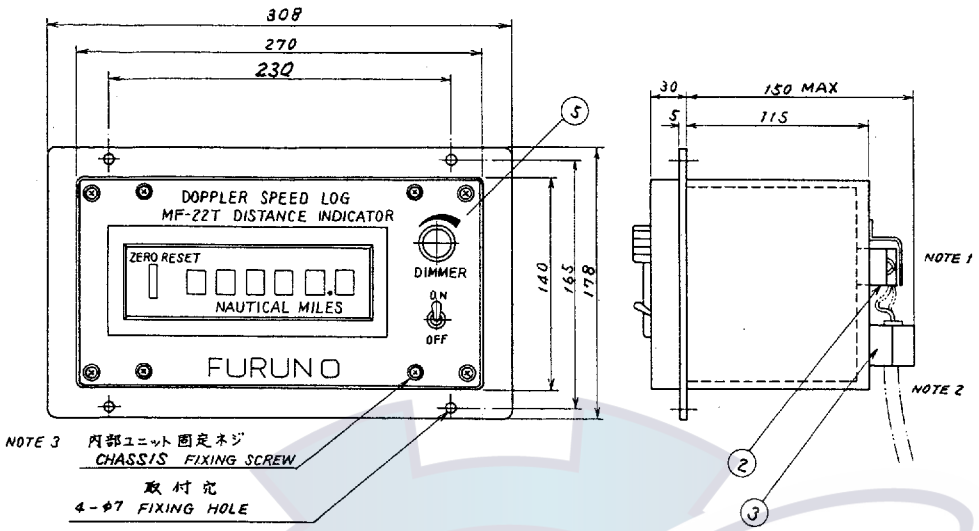

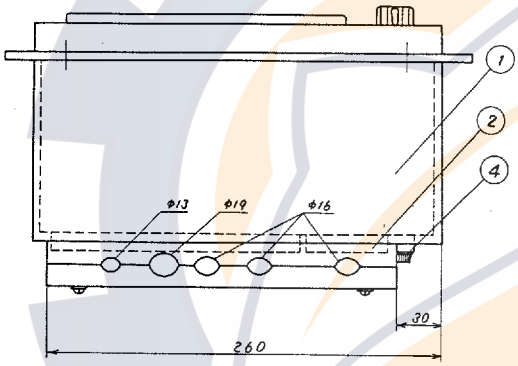

NOTE
1. 固定金具から端子台までのケーブルには約 250mm の弛みを持たせる。
TO ENABLE THE CHASSIS TO BE DRAWN OUT, ALLOW WIRES OF APPROX. 250mm LONG BETWEEN CABLE CLAMP AND TERMINAL STRIP.
2. ケーブルの鎧装は塗装を取除いてクランプで締めつける。
CABLE ARMOR SHOULD BE CLAMPED TIGHTLY AFTER REMOVING THE PAINT.
3. 内部ユニット固定ネジ(黒色)をゆるめると内部のユニットのみ端子台ごと取出すことが出来ます。
LOOSEN BLACK SCREWS TO DRAW OUT CHASSIS.

ITEM 品番	NAME 品名	MATERIAL 材質	Q'TY 数量	DWG.NO. 図番	REMARKS 摘要
5	表示パネル DISPLAY PANEL	SPCC	1		
4	ヒューズホルダー FUSE HOLDER		1		
3	ケーブル固定金具 CABLE CLAMP	A5052B	1		
2	端子台 TERMINAL BOARD		2		TB1, TB2
1	ケース本体 HOUSING	SPCC	1		

承認 APPROVED	APR・29・'81 K.K.	三角法 THIRD ANGLE PROJECTION		名称 TITLE	航程計(埋込型)外観図 OUTLINE OF DISTANCE INDICATOR (FLUSH MOUNT)
検図 CHECKED	APR・29・'81	尺度 SCALE	1/5	MF-22T-1	
製図 DRAWN	APR・28・'81 S. Nagawa	重量 WEIGHT	6.0 kg	図番 DWG.NO.	C7213-089-B

www.reelschematic.com

FURUNO

D-32

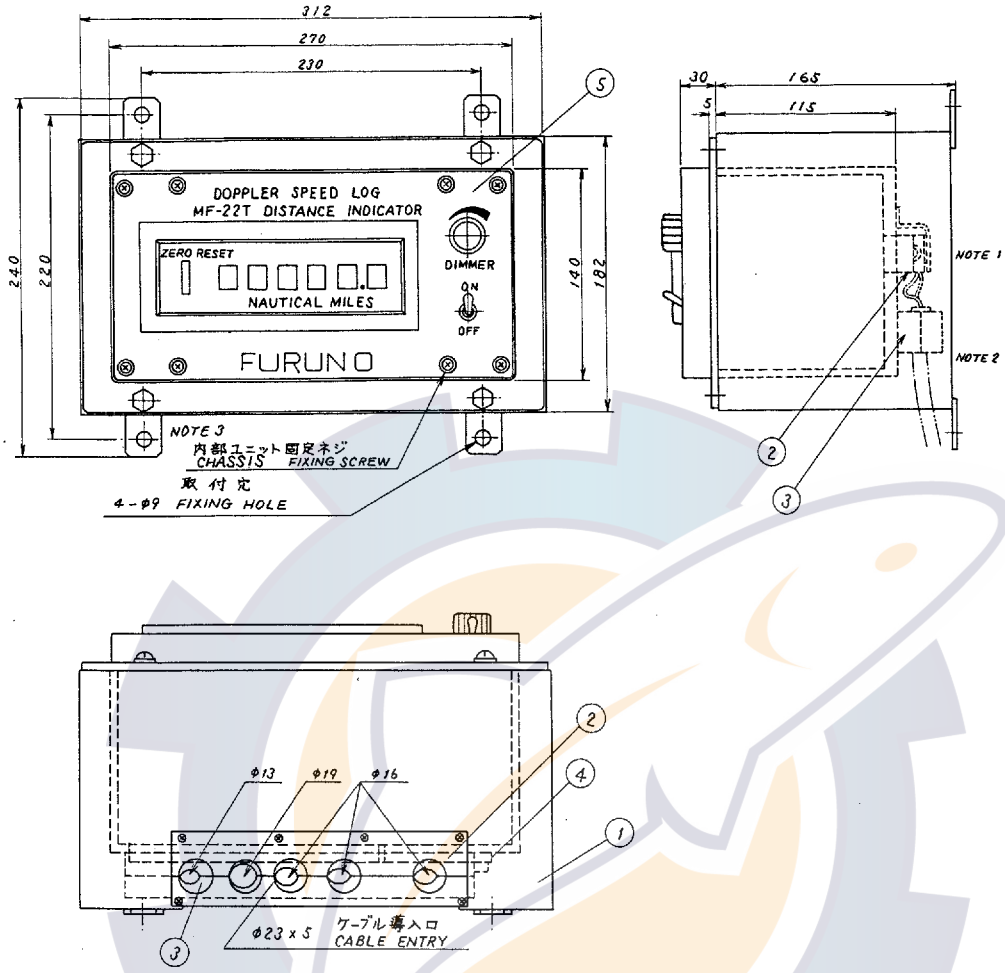

NOTE 1. 固定金具から端子台までのケーブルには約 250mmの弛みを持たせる。
TO ENABLE THE CHASSIS TO BE DRAWN OUT, ALLOW WIRES OF APPROX. 250mm LONG BETWEEN CABLE CLAMP AND TERMINAL STRIP.

2. ケーブルの鎧装は塗装を取除いてクランプで締めつける。
CABLE ARMOR SHOULD BE CLAMPED TIGHTLY AFTER REMOVING THE PAINT.

3. 内部ユニット固定ネジ(黒色)をゆるめると内部のユニットのみ端子台ごと取出すことが出来ます。
LOOSEN BLACK SCREWS TO DRAW OUT CHASSIS.

品番 ITEM	品名 NAME	材質 MATERIAL	数量 Q'TY	図番 DWG.NO.	摘要 REMARKS
5	表示パネル DISPLAY PANEL	SPCC	1		
4	ヒューズホルダー FUSE HOLDER		1		
3	ケーブル固定金具 CABLE CLAMP	A5052B	1		
2	端子台 TERMINAL BOARD		2		TB1, TB2
1	ケース本体 HOUSING	SPCC	1		

承認 APPROVED	APR. 29. '81 K. Kawa	三角法 THIRD ANGLE PROJECTION		名称 TITLE	航程計(壁掛型)外観図 OUTLINE OF DISTANCE INDICATOR (BULKHEAD MOUNT)
検図 CHECKED	APR. 29. '81	尺度 SCALE	1/5	MF-22T-2	
製図 DRAWN	APR. 28. '81 S. Hagawa	重量 WEIGHT	9.0 kg	図番 DWG. NO.	C7213-092-A

FURUNO ELECTRIC CO., LTD.

www.reelschematic.com

FURUNO

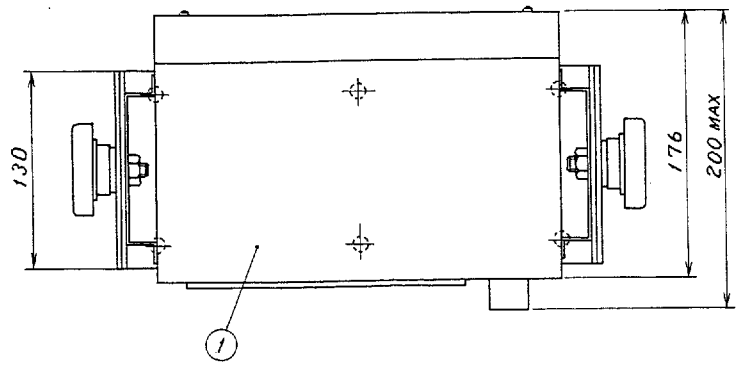

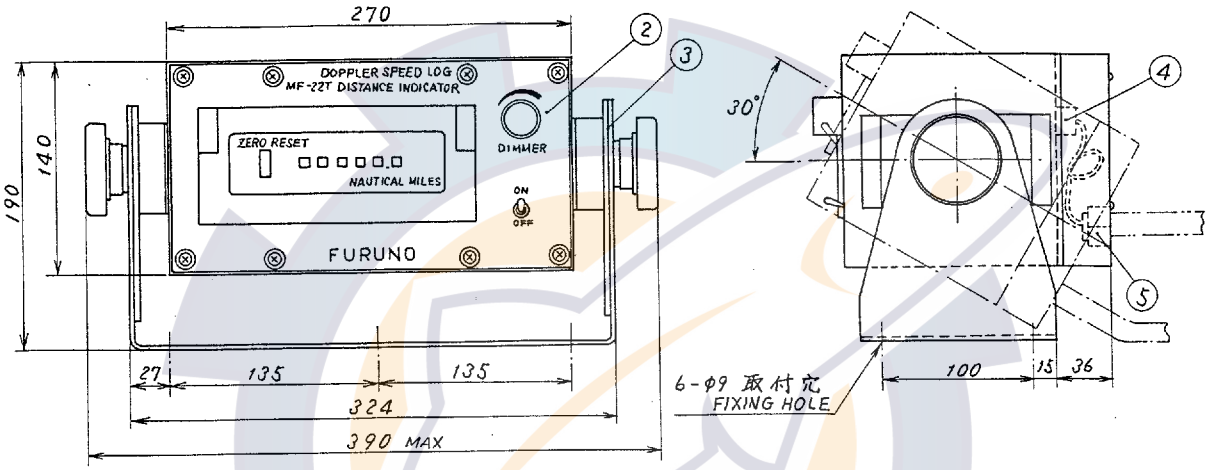

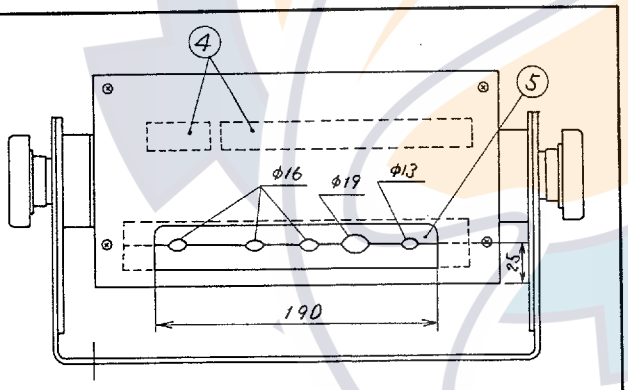

背面図
REAR VIEW

NOTE 1. 固定金具から端子台までのケーブルには約250 mmの弛みを持たせる。

TO ENABLE THE CHASSIS TO BE DRAWN OUT, ALLOW WIRES OF APPROX. 250mm LONG BETWEEN CABLE CLAMP AND TERMINAL STRIP.

2. ケーブルの鎧装は塗装を取り除いてクランプで締めつける。

CABLE ARMOR SHOULD BE CLAMPED TIGHTLY AFTER REMOVING THE PAINT.

ITEM 品番	NAME 品名	MATERIAL 材質	Q'TY 数量	DWG.NO. 図番	REMARKS 摘要
5	ケーブル固定金具 CABLE CLAMP	A5052B	1		
4	端子台 TERMINAL STRIP		2		TB1, TB2
3	取付台 MOUNTING BRACKET	SPCC	1		
2	表示パネル DISPLAY PANEL	SPCC	1		
1	ケース本体 HOUSING	SPCC	1		

承認 APPROVED	JUL.28.'87 K.Kato	三角法 THIRD ANGLE PROJECTION		名称 TITLE	航程計(卓上型)外観図 OUTLINE OF DISTANCE INDICATOR (TABLE TOP MOUNT)
検図 CHECKED	July.28.'87	尺度 SCALE	1/5	MF-22T-3	
製図 DRAWN	July.28.'87 S.Nagawa	重量 WEIGHT	6.0 kg	図番 DWG.NO.	C7213-113-B

FURUNO ELECTRIC CO., LTD

FURUNO

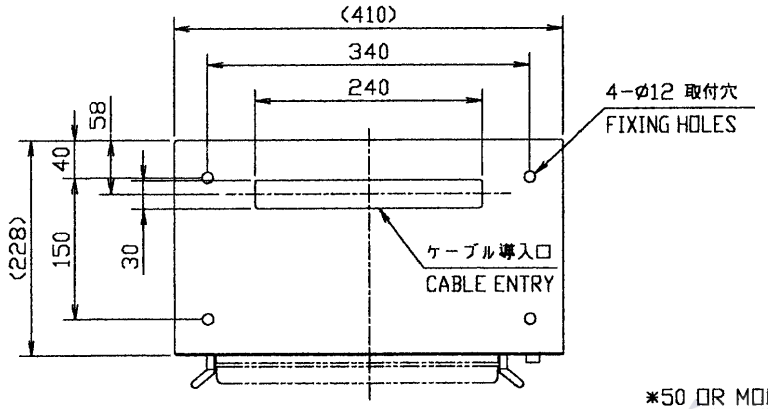

卓上取付寸法図(断面 A-A)

TABLETOP MOUNTING DIMENSIONS(SECTION A-A)

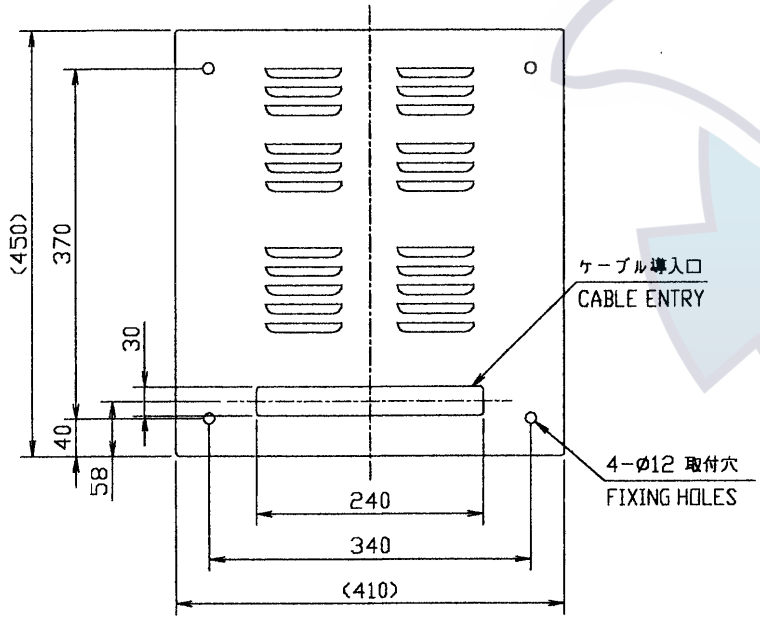

壁掛取付寸法図(断面 B-B)

BULKHEAD MOUNTING DIMENSIONS(SECTION B-B)

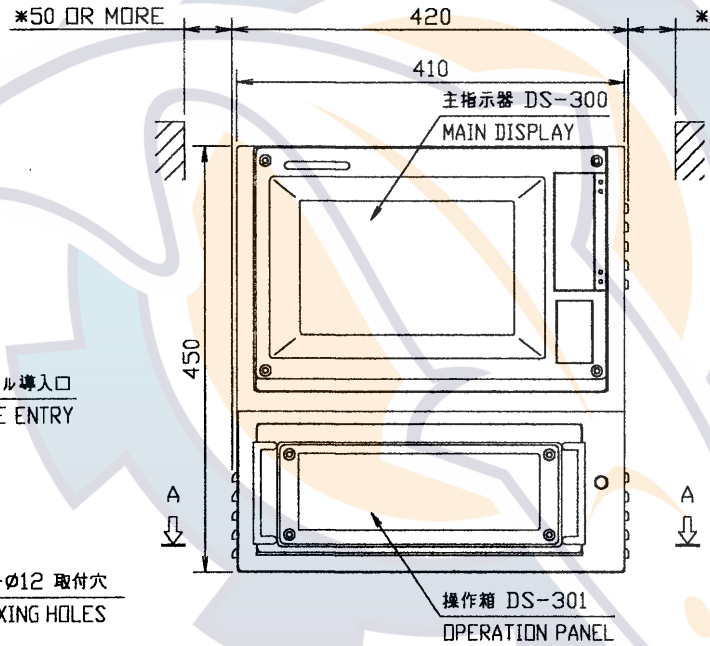

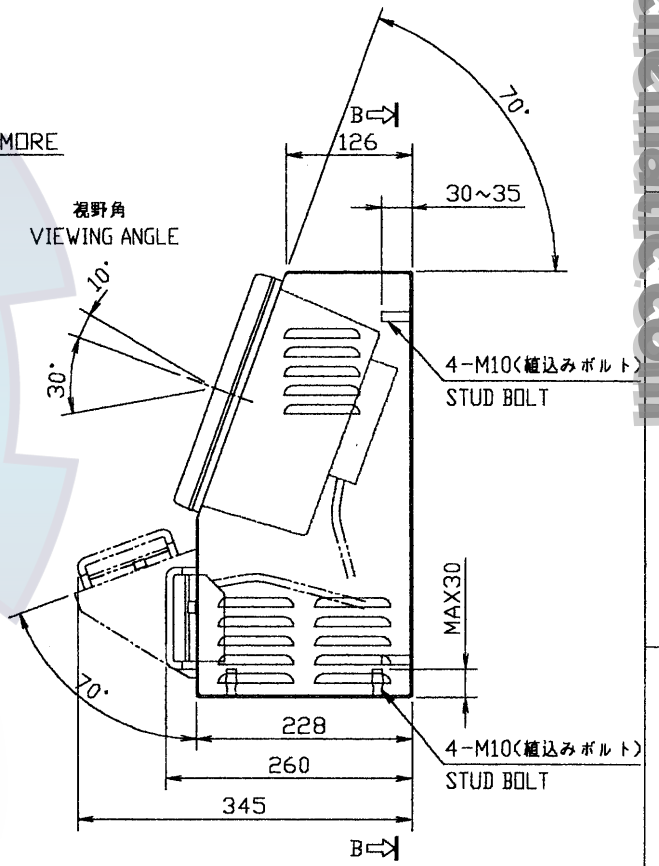

注記

1.*：推奨サービス空間。

2. 水平視野角は±45°。

NOTE

1.*: RECOMMENDED SERVICE SPACE.

2. HORIZONTAL VIEWING ANGLE IS ±45°.

DRAWN	Jun. 27 '01	T.YAMASAKI		TITLE	DS-30
CHECKED	Jun. 27 '01	Y.KIMURA		名称	主指示器ケース
APPROVED	Jun. 27 '01	Y.KIMURA			外寸図
SCALE	1/8	MASS 21 ±10% kg		NAME	DISPLAY UNIT CABINET
DWG.No.	C7236-G23-B				OUTLINE DRAWING

FURUNO ELECTRIC CO., LTD.

D-34

www.reelschematic.com

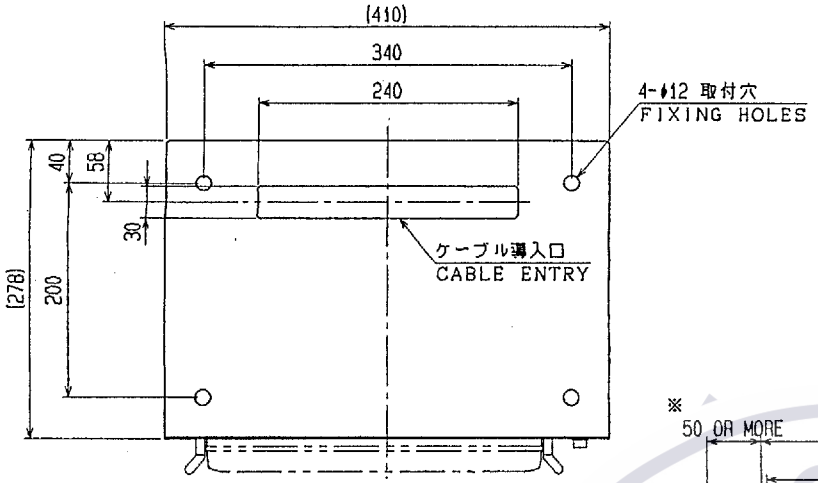

卓上取付寸法図 (断面A－A)
TABLETOP MOUNTING DIMENSIONS (SECTION A－A)

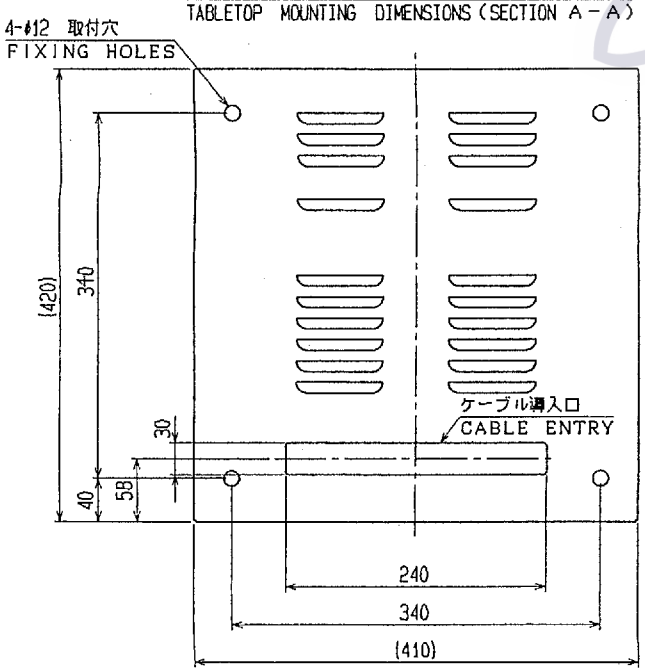

壁掛取付寸法図 (断面B－B)
BULKHEAD MOUNTING DIMENSIONS (SECTION B－B)

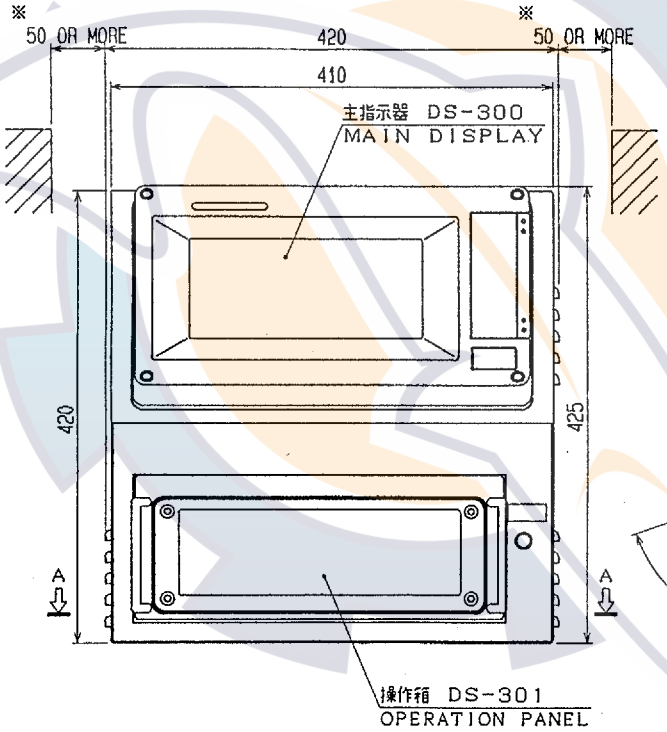

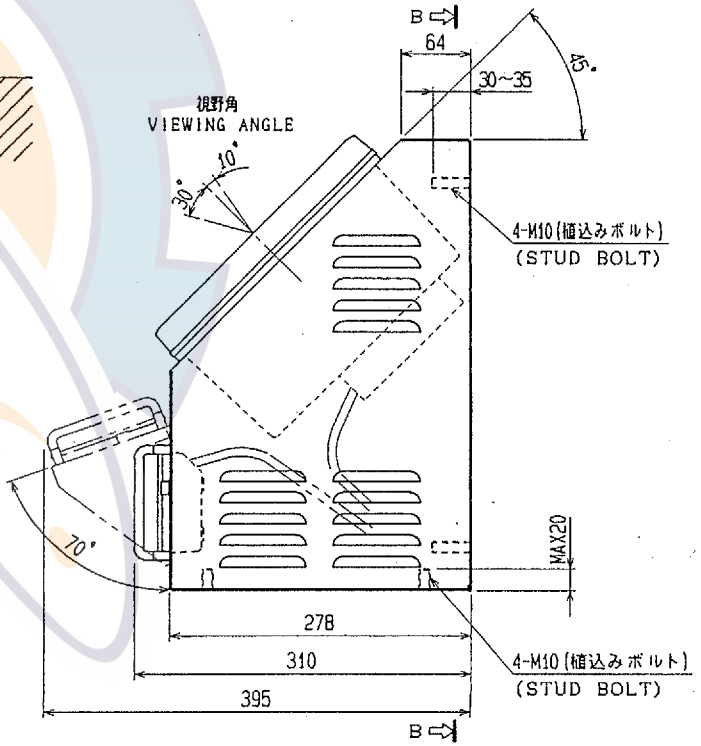

注記
1. ※：推奨サービス空間。
2. 水平視野角は±45°。

NOTE
1. ※: RECOMMENDED SERVICE SPACE.
2. HORIZONTAL VIEWING ANGLE IS ±45°.

品番 ITEM	品名 NAME	材質 MATERIAL	数量 Q'TY	図番 DWG. NO.	摘要 REMARKS

承認 APPROVED	MAY・11・'93 H. Magoshi	三角法 THIRD ANGLE PROJECTION		名称 TITLE	DS-30 主指示器ケース 外寸図 DISPLAY UNIT CABINET
検図 CHECKED	MAY・11・'93 T. Miyamoto	尺度 SCALE			
製図 DRAWN	MAY・8・'93 K. OKUDA	重量 WEIGHT	21 kg	図番 DWG. NO.	C7236－G21－A

www.reelschematic.com

www.reelschematic.com

APPENDIX. LIST OF DIP SWITCH SETTING

DIP Switch Location

The DIP switches are located on the boards shown in the table below.

Unit	Board	DIP Switch
Display Unit DS-300	LCP Board	S1, S2
Processor Unit DS-310	MCP Board	S1, S2, S3, S4
	MFT Board	S1
	MKL Board	S1
	MIF Board	S1, S2, S3, S4, S5, S6
Transceiver Unit DS-320	NCP Board	S1, S2, S4, S5
Digital Indicator DS-351 (Option)	PCP Board	S1
Distribution Unit DS-370 (Option)	OCP Board	S1

Setting and Function of DIP Switch

◎ : Do not change setting. ○ : Change setting as required.

1) Display Unit

Board	Switch Setting				Function	Factory setting
LCP Board	S1	#1		OFF	Mode selection: Main Display DS-300	
				ON	Ditto: Sub Display DS-300A	
		#2	#3	#4	Language selection	
		OFF	OFF	OFF	Japanese	
		ON	ON	ON	English	
		#5		OFF	Indication of current: Coming direction	
				ON	Indication of current: Going direction	
		#6		OFF	Time indication: Legacy	
				ON	Time indication: UTC when input GPS signal	
		#7, #8			Unused	
	S2	#8		OFF	High temperature alarm: Normal operation	O
				ON	Ditto: Test alarm	
		#1 to #7			Unused	

www.reelschematic.com

2) Processor Unit

Board	Switch Setting			Function	Factory Setting
MCP Board	S1	0		Monitor signal: Fore beam GEL	○
		1		Ditto : Fore beam EL	
		2		Ditto : Starboard beam GEL	
		3		Ditto : Starboard beam EL	
		4		Ditto : Port beam GEL	
		5		Ditto : Port beam EL	
		6		Ditto : TVG + external KP	
		7		Ditto : External KP	
		8 to F		Unused	
		GEL: Echo signal with TVG effected EL : Echo signal without TVG effected			
	S2	#1	#2	Bottom tracking beam selection	
		OFF	OFF	Fore beam	○
		ON	OFF	Starboard beam	
		ON	OFF	Port beam	
		ON	ON	All beams	
		#3	OFF	TX pulselength in water tracking mode: Standard	◎
			ON	Ditto : Long	
		#4	OFF	Automatic sound speed correction: On (Note 1)	◎
			ON	Ditto : Off	
		#5	OFF	Angular speed latitude error correction: On (Note 2)	◎
			ON	Ditto : Off	
		#6	OFF	Exponential smoothing: On (Note 3)	◎
			ON	Ditto : Off	
		#7	OFF	Compass speed correction: On (Note 4)	◎
			ON	Ditto : Off	
		#8	OFF	Ship's speed smoothing: Yes	◎
			ON	Ditto : No	

NOTE

1. Sound speed is corrected by water temperatre DS-30 transducer measures.
2. Angular speed measured by rate-of-turn gyro contains an error specific to latitude. For example, the error converted to ship's speed is 0.02kt in transverse speed at north latitude 35°. DS-30 corrects this error by latitude data fed by nav-sensor.
3. Smoothing applied to ship's speed data output
4. Gyrocompass reading contains an error which is given as a function of ship's speed and latitude. DS-30 corrects this error referring to correction table in memory. Gyrocompasses installed on vessels of 500 tons or more may correct the error by themselves. In that case, do not set this item to ON.

www.reelschematic.com

Board	Switch Setting			Function	Factory Setting
MCP Board	S3	#1	OFF	Speed data from nav-sensor: Position fix	◎
			ON	Ditto : Ship's speed	
		#2	OFF	GPS 0 kt: Unused for current reference calculation (When ship's speed measured by GPS is 0kt, current reference calculation is suspended, mainting the previous result.)	◎
			ON	Ditto : Used for current reference calculation	
		#3	#4	Position fix time interval (Interval at which ship's speed is calculated from position fix data fed by nav-sensor.)	
		OFF	OFF	1 minute	○
		OFF	ON	2 minutes	
		ON	OFF	5 minutes	
		ON	ON	10 minutes	
		#5	#6	Transceiver unit baud rate	
		OFF	OFF	9600	
		OFF	ON	4800	◎
		ON	OFF	2400	
		ON	ON	1200	
		#7	OFF	Interference rejector 1: Off	○
			ON	Ditto : On	
		#8	OFF	Interference rejector 2: Off	○
			ON	Ditto : On	
	S4	0		TVG curve selection: Auto (TVG curve is automatically adjusted based on water temperature measured by DS-30 transducer.)	◎
		1		Ditto : Water temp 20°C or less	
		2		Ditto : Water temp 20°C to 25°C	
		3		Ditto : Water temp 25°C to 30°C	
		4 to F		Ditto : Water temp 30°C or above	
MFT Board	S1	#8	OFF	Continuous self-test (for factory use): Off	○
			ON	Ditto : On	
		#1 to #7		Unused	
MKL Board	S1	#1	#2	Filter parameter	
		OFF	OFF	For large ship (ROM table 1)	○
		OFF	ON	For medium ship (ROM table 2)	
		ON	OFF	For small ship (ROM table 3)	
		ON	ON	For factory use	
		3	OFF	Initializing E^2PROM: Yes	◎
			ON	Ditto : No	
		#4	#5	Mode of output connector	
		OFF	-	Normal	◎
		ON	OFF	Raw data output	
		ON	ON	Test data input (for factory use)	

www.reelschematic.com

Board	Switch Setting			Function	
MIF Board	S1	#1	OFF	NMEA Format, Baud rate: 4800bps	For Port1 J2
			ON	CIF Format, Baud rate: 4800bps	
		#2	OFF	Data-through off *1	
			ON	Data-through on *1	
		#3	OFF	NMEA ver. 1.5	
			ON	NMEA ver. 2.0	
		#4	OFF	Logpulse out at forward and backward	
			ON	Logpulse out at forward only	
		#5	Same as #1		For Port2 J3
		#6	Same as #2		
		#7	Same as #3		
		#8	Not used		

*1 Data-through : Data from external sensor are output from the same port together with the data of DS-30.

www.reelschematic.com

Board	Switch Setting			Function	Factory Setting
MIF Board	S2	#1	#2	AUX port 1 baud rate	
		OFF	OFF	9800 bauds	
		OFF	ON	4800 bauds	○
		ON	OFF	2400 bauds	
		ON	ON	1200 bauds	
		#3	#4	AUX port 1 input data format	
		OFF	OFF	Type 1	○
		OFF	ON	Type 2	
		ON	-	Type 3	
		#5	#6	AUX port 2 baud rate	
		OFF	OFF	9600 (baud rate 1) or 600 bauds (baud rate 2)	
		OFF	ON	4800 (baud rate 1)or 300 bauds (baud rate 2)	○
		ON	OFF	2400 (baud rate 1)or 300 bauds (baud rate 2)	
		ON	ON	1200 (baud rate 1)or 300 bauds (baud rate 2)	
		#7	#8	AUX port 2 input data format	
		OFF	OFF	Wind direction/speed interface SC-D232S	○
		OFF	ON	NAV-PET (MDI-1)	
		ON	-	Wind direction/speed interface N-162LV-M	
		Note		Baud rate 1 or 2 of AUX 2 port is selected with S4-#6.	
	S3	#1	#2	Heading data input port selection	
		OFF	OFF	Gyro port	○
		OFF	ON	AUX 1 port	
		ON	OFF	AUX 2 port	
		ON	ON	CIF/NMEA port 1/2	
		#3	#4	Rate-of-turn data input port selection	
		OFF	OFF	Rate-of-turn gyro (DS-340) port	○
		OFF	ON	AUX 1 port	
		ON	-	AUX 2 port	
		#5	#6	Wind direction/speed data input port selection	
		OFF	OFF	Analog input port	○
		OFF	ON	CIF/NMEA port 1/2	
		ON	-	AUX 2 port	
		#7	OFF	Engine speed data input port : Analog port	○
			ON	Ditto : AUX 2 port	
		#8	OFF	Unused	○
			ON		

www.reelschematic.com

Board	Switch Setting			Function	Factory setting
MIF Board	S4	#1	#2	Ship's speed for distance run pulse selection	
		OFF	OFF	Speed over-the-ground & through-water & speed fed from nav sensor	○
		OFF	ON	Speed over-the-ground & through-water	
		ON	-	Speed through-water	
		#3	OFF	Type of ship's speed for distance run pulse: Vector	○
			ON	Ditto : Fore-aft	
		#4	OFF	Bearing data output: True course	○
			ON	Ditto : Heading	
		#5	OFF	Bearing data output at low Ship's speed: True course	○
			ON	Ditto :Heading (Since ship's course data fluctuates by rolling and pitching when ship's speed is extremely low, heading data is output instead of course.)	
		#6	OFF	Distance signal alarm Contact: ON = No alarm	○
			ON	Fore-aft status Contact: ON = Aft (note 1)	
		#7	OFF	CIF/NMEA 1 option data: Off	◎
			ON	Ditto : On (Note 2.)	
		#8	OFF	CIF/NMEA 2 option data: Off	◎
			ON	Ditto : On (Note 2.)	
	S5	0 to F		Engine revolution full scale setting.	
	S6	0		Rate-of turn gyro data averaging time: 10 mses	
		1		Ditto : 20mses	
		2		Ditto : 40mses	
		3		Ditto : 80mses	
		4		Ditto : 160mses	
		5		Ditto : 230mses	◎
		6		Ditto : 640mses	
		7 to F		Ditto : 1280mses	

Note 1: Prior to setting #6 to "ON", set #3 to "ON".

Note 2: DRU (Dual Doppler Auxiliary Data) and VWT (True Wind Speed and Angle) are outputted.

www.reelschematic.com

3) Transceiver Unit

Board	Switch Setting			Function	Factory Setting
NCP Board	S1/S2	S1	S2	Mode selection	
		OFF	-	Normal	○
		ON	OFF	Stand alone TX/RX (With the switches set as shown at left, turn on the transceiver unit, and the transceiver unit operates in stand-alone mode; output power and pulse length are adjusted with S5 and S4 respectively on NCP board.)	
		OFF	ON	Stand alone test	
	S4	0		Stand alone TX/RX mode TX range: 0 m	
		1		Ditto :0.5 m	
		2		Ditto :1.0 m	○
		3		Ditto :2.0 m	
		4		Ditto :5.0 m	
		5		Ditto :10.0 m	
		6		Ditto :20.0 m	
		7		Ditto :30.0 m	
NCP Board	S5	0		Stand alone TX/RX mode power control: 0 (max)	○
		1		Ditto : 1	
		2		Ditto : 2	
		3 to 7		Ditto : 3	

4) Digital Indicator

Set the DIP switch S1 on PCP baord at installaltion.

<table>
<tr><th>Board</th><th colspan="2">DIP SW</th><th>Function</th><th>Setting</th></tr>
<tr><td rowspan="8">PCP Board 66P3355</td><td rowspan="8">S1</td><td>1
2</td><td>Depth Unit Selection</td><td>
<table>
<tr><th>Depth Unit</th><th>1</th><th>2</th></tr>
<tr><td>m</td><td>–</td><td>OFF</td></tr>
<tr><td>ft</td><td>OFF</td><td>ON</td></tr>
<tr><td>fm</td><td>ON</td><td>ON</td></tr>
</table>
DS-350/351 only
</td></tr>
<tr><td>3</td><td>Display Mode Selection</td><td>OFF: Type A ON: Type B DS-350 only</td></tr>
<tr><td>4</td><td>Rate Gyro Connection</td><td>OFF:Yes ON: No DS-350/351 only</td></tr>
<tr><td>5</td><td>Gyrocompass Connection</td><td>OFF: Yes ON: No DS-351 only</td></tr>
<tr><td>6</td><td>Depth Selection</td><td>OFF: Internal Depth ON: External Depth
DS-350/351 only</td></tr>
<tr><td>7
8</td><td>Model Selection</td><td>
<table>
<tr><th>Model</th><th>7</th><th>8</th><th>Remarks</th></tr>
<tr><td>DS-30</td><td>OFF</td><td>OFF</td><td>DS-30/50 only</td></tr>
<tr><td rowspan="2">DS-351</td><td>OFF</td><td>ON</td><td>DS-30/50 only</td></tr>
<tr><td>ON</td><td>OFF</td><td>CI-60G/35 only</td></tr>
<tr><td>–</td><td>ON</td><td>ON</td><td>No use</td></tr>
</table>
</td></tr>
</table>

www.reelschematic.com

5) Distribution Unit

Board	Switch Setting				Function	Factory Setting
OCP Board	S1	#1	#2	#3		
		OFF	OFF	OFF	Normal	○
		OFF	OFF	ON	Dummy Test 1	
		ON	OFF	ON	Dummy Test 2	
		OFF	ON	ON	Dummy Test 3	
		ON	ON	ON	Dummy Auto Adjustable	
		#4 (Note1)		OFF	Not used	◎
				ON	Not used	
		#5 (Note1)		OFF	Not used	◎
				ON	Not used	
		#6		OFF	Only for water tracking, nav. ship's speed is displayed on optional indicator.	○
				ON	Nav. ship's speed is always displayed on optional indicator.	
		#7		OFF	Combined ship's speed is displayed on optional indicator.	○
				ON	Nav. ship's speed is displayed on optional indicator. (Note 2)	
		#8		OFF	Connection to DS-30	○
				ON	Connection to CI-60/60G	

Note 1. Set S1#4 and #5 to "OFF".
Note 2. Only when ship's speed is inputted from navigation device.